75 anniversary
1947-2022

2022 GENERAL CATALOGUE

cata
green innovation

The technical characteristics indicated in the catalogue must be verified by the **THE MANUFACTURER**.
Non-contractual photographs.
Cata Electrodomésticos S.L. reserves the right to modify the characteristics of its products without prior notice.
© Design, layout, images and content are the property of **Cata Electrodomésticos S.L.**

GENERAL CATALOGUE 2022

CATA, the company p5
HOODS p6-19
SURFACE INTEGRATION p6
DECORATIVE ISLANDS p6-7
CORNER p7
PRO SILENCE p7
DECORATIVE HOODS p7-14
INTEGRATION p15-16
INSERTS p15-17
TELESCOPIC p17-18
CONVENTIONAL p18-19
OVENS p20-22
MICROWAVES p22-23
HOBS p24-30
ROCOOK INDUCTION p24
INDUCTION p24-27
VITROCERAMIC p27-28
GAS p28-30
KITCHENWARE p30
WHITE GOODS p31
WINE COOLERS p31
SINKS and TAPS p32-33
VENTILATION p34-39
ELECTRIC WATER HEATER p40
DIMENSION DRAWING p41-69
TECHNICAL INFORMATION p70-117

75 anniversary
1947-2022

Spanish Company

CATA ELECTRODOMÉSTICOS, S.L., manufacturer of household appliances, founded in Torelló, Spain, in 1947. Since then, we have been pioneers in the domestic extraction business. Our wide product range includes extractors, hoods, hobs, ovens, microwaves, taps, sinks, dishwashers, washing machines, refrigerators, wine coolers and kitchenware.

Our values: Commitment to our customers

The design and development of our products are based on painstaking studies with a clear orientation towards meeting our customers' needs, providing solutions to promote functionality, efficiency, durability and reliability while remaining environmentally friendly. Every detail is important. That is why, in our brand whith more than seven decades of history, we have placed, and continue placing, special emphasis on all of them until we obtain the best possible product.

Experience

At CATA we are constantly researching. We use top-quality components together with the latest manufacturing techniques to achieve the most technologically advanced products on the market. Our proven experience in the creation, development and manufacturing processes are the pillars on which the high efficiency, quality and reliability of our products is based.

Energy efficiency. Environment

At CATA we are committed to the environment and we think that your kitchen can be an example of energy efficiency. We strive; it is an obligation and a goal to be able to offer products that contribute to create a much more sustainable, clean and welcoming world.

Our low-energy household appliances will collaborate on energy savings, protecting the environment and noticing the economic savings of the use of efficient devices.

SURFACE INTEGRATION

AS 750
Cod.: **08000400** EAN: **8422248078283**

- **Touch Control** Panel with timer and cleaning filters indicator
- 5 extraction levels, 4 + **1 TURBO**
- Extraction power (according to UNE/EN 61591): **650m³/h** - 140m³/h
- Sound power (Reg.(EU) nº65/2014): **40dB**(A), maximum: 64dB(A)
- BRUSHLESS motor. Ultra silent. Maximum energy consumption **130W**
- **Energy Class: A**

IAS 770
Cod. : **08000403** EAN : **8422248102568**

- **Touch Control** Panel with timer and cleaning filters indicator
- 5 extraction levels, 4 + **1 TURBO**
- Extraction power (according to UNE/EN 61591): **550m³/h** - 200m³/h
- Sound power (Reg.(EU) nº65/2014): **45dB**(A), maximum: 67dB(A)
- BRUSHLESS motor. Ultra silent. Maximum energy consumption 135W
- **Energy Class: A**

DECORATIVE ISLANDS

MAGRABA ISLAND
Cod.: **02119207** EAN: **8422248069342**

- **Electronic control panel** with authomatic shut-down timer
- 3 extraction levels
- Extraction power (according to UNE/EN 61591): **645m³/h** - 300m³/h
- Sound power (Reg.(EU) nº65/2014): **48dB**(A), maximum: 63dB(A)
- BT2 motor. Extra silent. Maximum energy consumption **200W**
- **High efficiency LED lighting**
- Energy class: C

MOON ISLAND
Cod.: **02119203** EAN: **8422248062084**

- **Touch control panel** with authomatic shut-down timer and cleaning filters indicator
- 3 extraction levels
- Extraction power (according to UNE/EN 61591): **645m³/h** - 300m³/h
- Sound power (Reg.(EU) nº65/2014): **48dB**(A), maximum: 63dB(A)
- BT2 motor. Extra silent. Maximum energy consumption **200W**
- **High efficiency LED lighting, adjustable intensity**
- Energy Class: C

FARO X ISLAND
Cod.: **02119101** EAN: **8422248074230**

- **Electronic control panel** with authomatic shut-down timer
- 3 extraction levels, 2 + 1 TURBO
- Extraction power (according to UNE/EN 61591): **800m³/h** - 340m³/h
- Sound power (Reg.(EU) nº65/2014): **50dB**(A), maximum: 65dB(A)
- BT3 motor. Extra silent. Maximum energy consumption **280W**
- High efficiency LED lighting
- **Energy class: A**

BENNU SLIM 1200 X ISLAND
Cod.: **02111307** EAN: **8422248094337**

- **Touch control panel** with authomatic shut-down timer and cleaning filters indicator + remote control
- 4 extraction levels, 3 + **1 TURBO**
- Extraction power (according to UNE/EN 61591): **620m³/h** - 300m³/h
- Sound power (Reg.(EU) nº65/2014): **50dB**(A), maximum: 65dB(A)
- S6 motor. Extra silent. Maximum energy consumption **105W**
- **High-efficiency lighting by intensity-adjustable two-tone warm / natural LED STRIP**

BENNU SLIM 900 X ISLAND
Cod.: **02111306** EAN: **8422248094313**

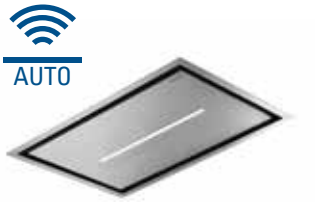

- **Touch control panel** with authomatic shut-down timer and cleaning filters indicator + remote control
- 4 extraction levels, 3 + **1 TURBO**
- Extraction power (according to UNE/EN 61591): **620m³/h** - 300m³/h
- Sound power (Reg.(EU) nº65/2014): **50dB**(A), maximum: 65dB(A)
- S6 motor. Extra silent. Maximum energy consumption **105W**
- **High-efficiency lighting by intensity-adjustable two-tone warm / natural LED STRIP**

SIRIN 1000 GWH ISLAND
Cod.: **02111002** EAN: **8422248097437**

- **Touch control panel** with authomatic shut-down timer and cleaning filters indicator + remote control
- 4 extraction levels, 3 + **1 TURBO**
- Extraction power (according to UNE/EN 61591): **850m³/h** - 340m³/h
- Sound power (Reg.(EU) nº65/2014): **50dB**(A), maximum: 65dB(A)
- BT3 motor. Extra silent. Maximum energy consumption **280W**
- **High efficiency LED lighting, adjustable intensity**

SIRIN 1000 WH ISLAND
Cod.: **02111001** EAN: **8422248077750**

- **Touch control panel** with authomatic shut-down timer and cleaning filters indicator + remote control
- 4 extraction levels, 3 + **1 TURBO**
- Extraction power (according to UNE/EN 61591): **850m³/h** - 340m³/h
- Sound power (Reg.(EU) nº65/2014): **50dB**(A), maximum: 65dB(A)
- BT3 motor. Extra silent. Maximum energy consumption **280W**
- **High efficiency LED lighting, adjustable intensity**

FENIX 1000 X ISLAND
Cod.: **02111305** EAN: **8422248077798**

- **Touch control panel** with authomatic shut-down timer and cleaning filters indicator + remote control
- 4 extraction levels, 3 + **1 TURBO**
- Extraction power (according to UNE/EN 61591): **850m³/h** - 340m³/h
- Sound power (Reg.(EU) nº65/2014): **50dB**(A), maximum: 65dB(A)
- BT3 motor. Extra silent. Maximum energy consumption **280W**
- **High efficiency LED lighting, adjustable intensity**

LEGEND 900 XGBK ISLAND
Cod.: **02097202** EAN: **8422248061681**

- **Touch Control Panel** with timer and cleaning filters indicator
- 5 extraction levels, 4 + **1 TURBO**
- Extraction power (according to UNE/EN 61591): **820m³/h** - 200m³/h
- Sound power (Reg.(EU) nº65/2014): **40dB**(A), maximum: 64dB(A)
- BRUSHLESS motor. Ultra silent. Maximum energy consumption **130W**
- **High efficiency Led lighting, adjustable intensity**
- **Energy Class: A+**

SYGMA 900 X ISLAND
Cod.: **02197313** EAN: **8422248062121**

- **Electronic control Panel** with authomatic shut down timer
- 3 extraction levels, 2 + **1 TURBO**
- Extraction power (according to UNE/EN 61591): **850m³/h** - 340m³/h
- Sound power (Reg.(EU) nº65/2014): **50dB**(A), maximum: 65dB(A)
- BT3 motor. Extra silent. Maximum energy consumption **280W**
- High efficiency LED lighting
- **Energy Class: A**

DECORATIVE ISLANDS

GAMMA 900 X ISLAND
Cod.: **02025205** EAN: **8422248077736**

- **Electronic control Panel** with authomatic shut down timer
- 3 extraction levels, 2 + **1 TURBO**
- Extraction power (according to UNE/EN 61591): **850m³/h** - 340m³/h
- Sound power (Reg.(EU) nº65/2014): **50dB**(A), maximum: 65dB(A)
- BT3 motor. Extra silent. Maximum energy consumption **280W**
- **High efficiency LED lighting**
- **Energy Class: A**

VEGA X ISLAND
Cod.: **02119311** EAN: **8422248077743**

- **Electronic control Panel** with authomatic shut down timer
- 3 extraction levels, 2 + **1 TURBO**
- Extraction power (according to UNE/EN 61591): **850m³/h** - 340m³/h
- Sound power (Reg.(EU) nº65/2014): **50dB**(A), maximum: 65dB(A)
- BT3 motor. Extra silent. Maximum energy consumption **280W**
- **High efficiency LED lighting**
- **Energy Class: A**

CORNER HOODS

ANGOLO BOX 1000 X
Cod.: **02195309** EAN: **8422248077774**

- **Electronic control Panel** with authomatic shut down timer
- 3 extraction levels, 2 + **1 TURBO**
- Extraction power (according to UNE/EN 61591): **800m³/h** - 340m³/h
- Sound power (Reg.(EU) nº65/2014): **50dB**(A), maximum: 65dB(A)
- BT3 motor. Extra silent. Maximum energy consumption **280W**
- **High efficiency strip LED lighting**
- Finished in Stainless steel

ANGOLO X
Cod.: **02195310** EAN: **8422248077781**

- **Electronic control Panel** with authomatic shut down timer
- 3 extraction levels, 2 + **1 TURBO**
- Extraction power (according to UNE/EN 61591): **850m³/h** - 340m³/h
- Sound power (Reg.(EU) nº65/2014): **50dB**(A), maximum: 65dB(A)
- BT3 motor. Extra silent. Maximum energy consumption **280W**
- **High efficiency strip LED lighting**
- Finished in Stainless steel

PRO SILENCE cata & Can Roca

GRECO PRO SILENCE 90 BK
Cod.: **02184406** EAN: **8422248102032**

- **Touch Control Panel** with authomatic shut-down timer and cleaning filters indicator
- 5 extraction levels, 4 + **1 TURBO**
- Extraction power (according to UNE/EN 61591): **865m³/h** - 282m³/h**
- PRO SILENCE. Roof Motor. Maximum energy consumption **155W**
- **This cooker hood just works with the PRO SILENCE motor**
- **Energy Class: A***

GRECO PRO SILENCE 90 WH
Cod.: **02184006** EAN: **8422248102445**

- **Touch Control Panel** with authomatic shut-down timer and cleaning filters indicator
- 5 extraction levels, 4 + **1 TURBO**
- Extraction power (according to UNE/EN 61591): **865m³/h** - 282m³/h**
- PRO SILENCE. Roof Motor. Maximum energy consumption **155W**
- **This cooker hood just works with the PRO SILENCE motor**
- **Energy Class: A***

GLADIUS PRO SILENCE 900 XGBK
Cod.: **02181306** EAN: **8422248102049**

- **Touch Control Panel** with authomatic shut-down timer and cleaning filters indicator
- 5 extraction levels, 4 + **1 TURBO**
- Extraction power (according to UNE/EN 61591): maximum: **865m³/h** - 282m³/h**
- PRO SILENCE. Roof Motor. Maximum energy consumption **155W**
- **This cooker hood just works with the PRO SILENCE motor**
- **Energy Class: A***

PRO SILENCE
Cod.: **02000103** EAN: **8422248102025**

- 5 Extraction levels, 4+**1 TURBO**. **Touch Control Panel**
- Extraction power max.-min. (Reg.(UE) no65/2014): **865m³/h** - 282m³/h**
- **Energy Class: A***

* Energy class measured for the complete system of Roof motor+equivalent rangehoods.
** Tested with the 6m lengh aluminium flexible ducting provided.

DECORATIVE HOODS cata & Can Roca

GOYA PRO 90 BK
Cod.: **02184401** EAN: **8422248080613**

PRO

- **Multifunction TFT Touch screen** with authomatic shut-down timer and cleaning filters indicator
- 6 extraction levels, Silent + 4 + **TURBO**
- Extraction power (according to UNE/EN 61591): **842m³/h** - 283m³/h
- Sound power (Reg.(EU) nº65/2014): **48dB**(A), maximum: 64dB(A)
- BRUSHLESS motor. Ultra silent. Maximum energy consumption **135W**
- **High efficiency strip Led lighting, adjustable intensity**
- **Energy Class: A+++**

GOYA 90 BK CATA&ROCA
Cod.: **02184402** EAN: **8422248106108**

- **Touch Control Panel** with authomatic shut-down timer and cleaning filters indicator
- 5 extraction levels, 4 + **1 TURBO**
- Extraction power (according to UNE/EN 61591): **820m³/h** - 200m³/h
- Sound power (Reg.(EU) nº65/2014): **40dB**(A), maximum: 64dB(A)
- BRUSHLESS motor. Ultra silent. Maximum energy consumption **130W**
- **High efficiency Strip Led lighting, adjustable intensity**
- **Energy Class: A+**

GOYA 70 BK CATA&ROCA
Cod.: **02133401** EAN: **8422248106115**

- **Touch Control Panel** with authomatic shut-down timer and cleaning filters indicator
- 5 extraction levels, 4 + **1 TURBO**
- Extraction power (according to UNE/EN 61591): **820m³/h** - 200m³/h
- Sound power (Reg.(EU) nº65/2014): **40dB**(A), maximum: 64dB(A)
- BRUSHLESS motor. Ultra silent. Maximum energy consumption **130W**
- **High efficiency Strip Led lighting, adjustable intensity**
- **Energy Class: A+**

GOYA 90 WH CATA&ROCA
Cod.: **02184001** EAN: **8422248106122**

- **Touch Control Panel** with authomatic shut-down timer and cleaning filters indicator
- 5 extraction levels, 4 + **1 TURBO**
- Extraction power (according to UNE/EN 61591): **820m³/h** - 200m³/h
- Sound power (Reg.(EU) nº65/2014): **40dB**(A), maximum: 64dB(A)
- BRUSHLESS motor. Ultra silent. Maximum energy consumption **130W**
- **High efficiency Strip Led lighting, adjustable intensity**
- **Energy Class: A+**

DECORATIVE HOODS

cata & Can Roca

GOYA 70 WH CATA&ROCA
Cod.: **02133001** EAN: **8422248106139**

- **Touch Control Panel** with authomatic shut-down timer and cleaning filters indicator
- 5 extraction levels, 4 + **1 TURBO**
- Extraction power (according to UNE/EN 61591): **820m³/h** - 200m³/h
- Sound power (Reg.(EU) nº65/2014): **40dB**(A), maximum: 64dB(A)
- BRUSHLESS motor. Ultra silent. Maximum energy consumption **130W**
- **High efficiency Strip Led lighting, adjustable intensity**
- **Energy Class: A+**

GRECO 90 BK CATA&ROCA
Cod.: **02184407** EAN: **8422248106146**

- **Touch Control Panel** with authomatic shut-down timer and cleaning filters indicator
- 4 extraction levels, 3 + **1 TURBO**
- Extraction power (according to UNE/EN 61591): **850m³/h** - 340m³/h
- Sound power (Reg.(EU) nº65/2014): **50dB**(A), maximum: 65dB(A)
- BT3 motor. Ultra silent. Maximum energy consumption **280W**
- High efficiency Led lighting, adjustable intensity
- **Energy Class: A**

GRECO 90 WH CATA&ROCA
Cod.: **02184007** EAN: **8422248106153**

- **Touch Control Panel** with authomatic shut-down timer and cleaning filters indicator
- 4 extraction levels, 3 + **1 TURBO**
- Extraction power (according to UNE/EN 61591): **850m³/h** - 340m³/h
- Sound power (Reg.(EU) nº65/2014): **50dB**(A), maximum: 65dB(A)
- BT3 motor. Ultra silent. Maximum energy consumption **280W**
- High efficiency Led lighting, adjustable intensity
- **Energy Class: A**

GRECO 80 BK CATA&ROCA
Cod.: **02145407** EAN: **8422248106160**

- **Touch Control Panel** with authomatic shut-down timer and cleaning filters indicator
- 4 extraction levels, 3 + **1 TURBO**
- Extraction power (according to UNE/EN 61591): **850m³/h** - 340m³/h
- Sound power (Reg.(EU) nº65/2014): **50dB**(A), maximum: 65dB(A)
- BT3 motor. Ultra silent. Maximum energy consumption **280W**
- High efficiency Led lighting, adjustable intensity
- **Energy Class: A**

GRECO 80 GR CATA&ROCA
Cod.: **02145203** EAN: **8422248106177**

- **Touch Control Panel** with authomatic shut-down timer and cleaning filters indicator
- 4 extraction levels, 3 + **1 TURBO**
- Extraction power (according to UNE/EN 61591): **850m³/h** - 340m³/h
- Sound power (Reg.(EU) nº65/2014): **50dB**(A), maximum: 65dB(A)
- BT3 motor. Ultra silent. Maximum energy consumption **280W**
- High efficiency Led lighting, adjustable intensity
- **Energy Class: A**

GRECO 80 WH CATA&ROCA
Cod.: **02145007** EAN: **8422248106184**

- **Touch Control Panel** with authomatic shut-down timer and cleaning filters indicator
- 4 extraction levels, 3 + **1 TURBO**
- Extraction power (according to UNE/EN 61591): **850m³/h** - 340m³/h
- Sound power (Reg.(EU) nº65/2014): **50dB**(A), maximum: 65dB(A)
- BT3 motor. Ultra silent. Maximum energy consumption **280W**
- High efficiency Led lighting, adjustable intensity
- **Energy Class: A**

GRECO 70 BK CATA&ROCA
Cod.: **02133407** EAN: **8422248106191**

- **Touch Control Panel** with authomatic shut-down timer and cleaning filters indicator
- 4 extraction levels, 3 + **1 TURBO**
- Extraction power (according to UNE/EN 61591): **850m³/h** - 340m³/h
- Sound power (Reg.(EU) nº65/2014): **50dB**(A), maximum: 65dB(A)
- BT3 motor. Ultra silent. Maximum energy consumption **280W**
- High efficiency Led lighting, adjustable intensity
- **Energy Class: A**

GRECO 70 WH CATA&ROCA
Cod.: **02133007** EAN: **8422248106207**

- **Touch Control Panel** with authomatic shut-down timer and cleaning filters indicator
- 4 extraction levels, 3 + **1 TURBO**
- Extraction power (according to UNE/EN 61591): **850m³/h** - 340m³/h
- Sound power (Reg.(EU) nº65/2014): **50dB**(A), maximum: 65dB(A)
- BT3 motor. Ultra silent. Maximum energy consumption **280W**
- High efficiency Led lighting, adjustable intensity
- **Energy Class: A**

DECORATIVE HOODS

THALASSA 1200XGBK
Cod.: **02157403** EAN: **8422248073790**

- **Touch Control Panel** with authomatic shut-down timer and cleaning filters indicator
- 5 extraction levels, 4 + **1 TURBO**
- Extraction power (according to UNE/EN 61591): **820m³/h** - 200m³/h
- Sound power (Reg.(EU) nº65/2014): **40dB**(A), maximum: 64dB(A)
- BRUSHLESS motor. Ultra silent. Maximum energy consumption **130W**
- High efficiency Led lighting, adjustable intensity
- **Energy Class: A+**

THALASSA 900XGBK
Cod.: **02159405** EAN: **8422248104777**

- **Touch Control Panel** with digital display, authomatic shut-down timer and cleaning filters indicator
- 6 extraction levels, 5 + **1 TURBO**
- Extraction power (according to UNE/EN 61591): **842m³/h** - 283m³/h
- Sound power (Reg.(EU) nº65/2014): **46dB**(A), maximum: 64dB(A)
- BRUSHLESS motor. Ultra silent. Maximum energy consumption **135W**
- **High-efficiency lighting by intensity-adjustable two-tone warm / natural LED STRIP**
- **Energy Class: A+++**

THALASSA 900XGWH
Cod.: **02159006** EAN: **8422248104821**

- **Touch Control Panel** with digital display, authomatic shut-down timer and cleaning filters indicator
- 6 extraction levels, 5 + **1 TURBO**
- Extraction power (according to UNE/EN 61591): **842m³/h** - 283m³/h
- Sound power (Reg.(EU) nº65/2014): **46dB**(A), maximum: 64dB(A)
- BRUSHLESS motor. Ultra silent. Maximum energy consumption **135W**
- **High-efficiency lighting by intensity-adjustable two-tone warm / natural LED STRIP**
- **Energy Class: A+++**

THALASSA 900XGGR
Cod.: **02159506** EAN: **8422248104869**

- **Touch Control Panel** with digital display, authomatic shut-down timer and cleaning filters indicator
- 6 extraction levels, 5 + **1 TURBO**
- Extraction power (according to UNE/EN 61591): **842m³/h** - 283m³/h
- Sound power (Reg.(EU) nº65/2014): **46dB**(A), maximum: 64dB(A)
- BRUSHLESS motor. Ultra silent. Maximum energy consumption **135W**
- **High-efficiency lighting by intensity-adjustable two-tone warm / natural LED STRIP**
- **Energy Class: A+++**

cata green innovation

THALASSA 800XGBK
Cod.: **02145406** EAN: **8422248104791**

AUTO

- **Touch Control Panel** with digital display, authomatic shut-down timer and cleaning filters indicator
- 6 extraction levels, 5 + **1 TURBO**
- Extraction power (according to UNE/EN 61591): **842m³/h** - 283m³/h
- Sound power (Reg.(EU) nº65/2014): **46dB**(A), maximum: 64dB(A)
- BRUSHLESS motor. Ultra silent. Maximum energy consumption **135W**
- **High-efficiency lighting by intensity-adjustable two-tone warm / natural LED STRIP**
- **Energy Class: A+++**

THALASSA 800XGWH
Cod.: **02145006** EAN: **8422248104838**

AUTO

- **Touch Control Panel** with digital display, authomatic shut-down timer and cleaning filters indicator
- 6 extraction levels, 5 + **1 TURBO**
- Extraction power (according to UNE/EN 61591): **842m³/h** - 283m³/h
- Sound power (Reg.(EU) nº65/2014): **46dB**(A), maximum: 64dB(A)
- BRUSHLESS motor. Ultra silent. Maximum energy consumption **135W**
- **High-efficiency lighting by intensity-adjustable two-tone warm / natural LED STRIP**
- **Energy Class: A+++**

THALASSA 800XGGR
Cod.: **02145506** EAN: **8422248104876**

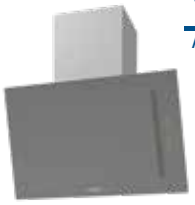

AUTO

- **Touch Control Panel** with digital display, authomatic shut-down timer and cleaning filters indicator
- 6 extraction levels, 5 + **1 TURBO**
- Extraction power (according to UNE/EN 61591): **842m³/h** - 283m³/h
- Sound power (Reg.(EU) nº65/2014): **46dB**(A), maximum: 64dB(A)
- BRUSHLESS motor. Ultra silent. Maximum energy consumption **135W**
- **High-efficiency lighting by intensity-adjustable two-tone warm / natural LED STRIP**
- **Energy Class: A+++**

THALASSA 700XGBK
Cod.: **02178207** EAN: **8422248104807**

AUTO

- **Touch Control Panel** with digital display, authomatic shut-down timer and cleaning filters indicator
- 6 extraction levels, 5 + **1 TURBO**
- Extraction power (according to UNE/EN 61591): **842m³/h** - 283m³/h
- Sound power (Reg.(EU) nº65/2014): **46dB**(A), maximum: 64dB(A)
- BRUSHLESS motor. Ultra silent. Maximum energy consumption **135W**
- **High-efficiency lighting by intensity-adjustable two-tone warm / natural LED STRIP**
- **Energy Class: A+++**

THALASSA 700XGWH
Cod.: **02178007** EAN: **8422248104845**

AUTO

- **Touch Control Panel** with digital display, authomatic shut-down timer and cleaning filters indicator
- 6 extraction levels, 5 + **1 TURBO**
- Extraction power (according to UNE/EN 61591): **842m³/h** - 283m³/h
- Sound power (Reg.(EU) nº65/2014): **46dB**(A), maximum: 64dB(A)
- BRUSHLESS motor. Ultra silent. Maximum energy consumption **135W**
- **High-efficiency lighting by intensity-adjustable two-tone warm / natural LED STRIP**
- **Energy Class: A+++**

THALASSA 600XGBK
Cod.: **02127211** EAN: **8422248104814**

AUTO

- **Touch Control Panel** with digital display, authomatic shut-down timer and cleaning filters indicator
- 6 extraction levels, 5 + **1 TURBO**
- Extraction power (according to UNE/EN 61591): **842m³/h** - 283m³/h
- Sound power (Reg.(EU) nº65/2014): **46dB**(A), maximum: 64dB(A)
- BRUSHLESS motor. Ultra silent. Maximum energy consumption **135W**
- **High-efficiency lighting by intensity-adjustable two-tone warm / natural LED STRIP**
- **Energy Class: A+++**

THALASSA 600XGWH
Cod.: **02127011** EAN: **8422248104852**

AUTO

- **Touch Control Panel** with digital display, authomatic shut-down timer and cleaning filters indicator
- 6 extraction levels, 5 + **1 TURBO**
- Extraction power (according to UNE/EN 61591): **842m³/h** - 283m³/h
- Sound power (Reg.(EU) nº65/2014): **46dB**(A), maximum: 64dB(A)
- BRUSHLESS motor. Ultra silent. Maximum energy consumption **135W**
- **High-efficiency lighting by intensity-adjustable two-tone warm / natural LED STRIP**
- **Energy Class: A+++**

VALTO 900 XGBK
Cod.: **02059401** EAN: **8422248094030**

- **Touch Control Panel** with digital display, authomatic shut-down timer and cleaning filters indicator
- 6 extraction levels, 5 + **1 TURBO**
- Extraction power (according to UNE/EN 61591): **575m³/h** - 170m³/h
- Sound power (Reg.(EU) nº65/2014): **44dB**(A), maximum: 61dB(A)
- BT3 motor. Extra silent. Maximum energy consumption **110W**
- **High efficiency Strip Led lighting, adjustable intensity**
- **Energy Class: A+**

VALTO 700 XGBK
Cod.: **02078402** EAN: **8422248094047**

- **Touch Control Panel** with digital display, authomatic shut-down timer and cleaning filters indicator
- 6 extraction levels, 5 + **1 TURBO**
- Extraction power (according to UNE/EN 61591): **575m³/h** - 170m³/h
- Sound power (Reg.(EU) nº65/2014): **44dB**(A), maximum: 61dB(A)
- BT3 motor. Extra silent. Maximum energy consumption **110W**
- **High efficiency Strip Led lighting, adjustable intensity**
- **Energy Class: A+**

VALTO 600 XGBK
Cod.: **02027505** EAN: **8422248094054**

- **Touch Control Panel** with digital display, authomatic shut-down timer and cleaning filters indicator
- 6 extraction levels, 5 + **1 TURBO**
- Extraction power (according to UNE/EN 61591): **575m³/h** - 170m³/h
- Sound power (Reg.(EU) nº65/2014): **44dB**(A), maximum: 61dB(A)
- BT3 motor. Extra silent. Maximum energy consumption **110W**
- **High efficiency Strip Led lighting, adjustable intensity**
- **Energy Class: A+**

VALTO 900 XGWH
Cod.: **02059008** EAN: **8422248094061**

- **Touch Control Panel** with digital display, authomatic shut-down timer and cleaning filters indicator
- 6 extraction levels, 5 + **1 TURBO**
- Extraction power (according to UNE/EN 61591): **575m³/h** - 170m³/h
- Sound power (Reg.(EU) nº65/2014): **44dB**(A), maximum: 61dB(A)
- BT3 motor. Extra silent. Maximum energy consumption **110W**
- **High efficiency Strip Led lighting, adjustable intensity**
- **Energy Class: A+**

VALTO 700 XGWH
Cod.: **02078003** EAN: **8422248094078**

- **Touch Control Panel** with digital display, authomatic shut-down timer and cleaning filters indicator
- 6 extraction levels, 5 + **1 TURBO**
- Extraction power (according to UNE/EN 61591): **575m³/h** - 170m³/h
- Sound power (Reg.(EU) nº65/2014): **44dB**(A), maximum: 61dB(A)
- BT3 motor. Extra silent. Maximum energy consumption **110W**
- **High efficiency Strip Led lighting, adjustable intensity**
- **Energy Class: A+**

DECORATIVE HOODS

VALTO 600 XGWH
Cod.: **02027107** EAN: **8422248094085**

- **Touch Control Panel** with digital display, authomatic shut-down timer and cleaning filters indicator
- 6 extraction levels, 5 + **1 TURBO**
- Extraction power (according to UNE/EN 61591): **575m³/h** - 170m³/h
- Sound power (Reg.(EU) nº65/2014): **44dB**(A), maximum: 61dB(A)
- BT3 motor. Extra silent. Maximum energy consumption **110W**
- **High efficiency Strip Led lighting, adjustable intensity**
- **Energy Class: A+**

WANDA 900 XGBK
Cod.: **02059405** EAN: **8422248102308**

- **Touch Control Panel** with authomatic shut-down timer
- 9 extraction levels
- Extraction power (according to UNE/EN 61591): **525m³/h** - 207m³/h
- Sound power (Reg.(EU) nº65/2014): **39dB**(A), maximum: 59dB(A)
- BRUSHLESS motor. Ultra silent. Maximum energy consumption **70W**
- High efficiency Led lighting
- **Energy Class: A++**

WANDA 700 XGBK
Cod.: **02078405** EAN: **8422248102315**

- **Touch Control Panel** with authomatic shut-down timer
- 9 extraction levels
- Extraction power (according to UNE/EN 61591): **525m³/h** - 207m³/h
- Sound power (Reg.(EU) nº65/2014): **39dB**(A), maximum 59dB(A)
- BRUSHLESS motor. Ultra silent. Maximum energy consumption **70W**
- High efficiency Led lighting
- **Energy Class: A++**

WANDA 600 XGBK
Cod.: **02027210** EAN: **8422248102322**

- **Touch Control Panel** with authomatic shut-down timer
- 9 extraction levels
- Extraction power (according to UNE/EN 61591): **525m³/h** - 207m³/h
- Sound power (Reg.(EU) nº65/2014): **39dB**(A), maximum: 59dB(A)
- BRUSHLESS motor. Ultra silent. Maximum energy consumption **70W**
- High efficiency Led lighting
- **Energy Class: A++**

WANDA 900 XGWH
Cod.: **02059010** EAN: **8422248102339**

- **Touch Control Panel** with authomatic shut-down timer
- 9 extraction levels
- Extraction power (according to UNE/EN 61591): **525m³/h** - 207m³/h
- Sound power (Reg.(EU) nº65/2014): **39dB**(A), maximum: 59dB(A)
- BRUSHLESS motor. Ultra silent. Maximum energy consumption **70W**
- High efficiency Led lighting
- **Energy Class: A++**

WANDA 700 XGWH
Cod.: **02078006** EAN: **8422248102346**

- **Touch Control Panel** with authomatic shut-down timer
- 9 extraction levels
- Extraction power (according to UNE/EN 61591): **525m³/h** - 207m³/h
- Sound power (Reg.(EU) nº65/2014): **39dB**(A), maximum: 59dB(A)
- BRUSHLESS motor. Ultra silent. Maximum energy consumption **70W**
- High efficiency Led lighting
- **Energy Class: A++**

WANDA 600 XGWH
Cod.: **02027012** EAN: **8422248102353**

- **Touch Control Panel** with authomatic shut-down timer
- 9 extraction levels
- Extraction power (according to UNE/EN 61591): **525m³/h** - 207m³/h
- Sound power (Reg.(EU) nº65/2014): **39dB**(A), maximum: 59dB(A)
- BRUSHLESS motor. Ultra silent. Maximum energy consumption **70W**
- High efficiency Led lighting
- **Energy Class: A++**

LENA 600XGBK
Cod.: **02032205** EAN: **8422248102292**

- **Electronic control Panel** with authomatic shut down timer
- 3 extraction levels
- Extraction power (according to UNE/EN 61591): **500m³/h** - 310m³/h
- Sound power (Reg.(EU) nº65/2014): **45dB**(A), maximum: 63dB(A)
- 1 motor. Maximum energy consumption **120W**
- High efficiency LED lighting
- Energy Class: B

LENA 500XGBK
Cod.: **02032206** EAN: **8422248102377**

- **Electronic control Panel** with authomatic shut down timer
- 3 extraction levels
- Extraction power (according to UNE/EN 61591): **500m³/h** - 310m³/h
- Sound power (Reg.(EU) nº65/2014): **45dB**(A), maximum: 63dB(A)
- 1 motor. Maximum energy consumption **120W**
- High efficiency LED lighting
- Energy Class: B

LENA 600XGWH
Cod.: **02032005** EAN: **8422248102285**

- **Electronic control Panel** with authomatic shut down timer
- 3 extraction levels
- Extraction power (according to UNE/EN 61591): **500m³/h** - 310m³/h
- Sound power (Reg.(EU) nº65/2014): **45dB**(A), maximum: 63dB(A)
- 1 motor. Maximum energy consumption **120W**
- High efficiency LED lighting
- Energy Class: B

LENA 500XGWH
Cod.: **02032006** EAN: **8422248102360**

- **Electronic control** Panel with authomatic shut down timer
- 3 extraction levels
- Extraction power (according to UNE/EN 61591): **500m³/h** - 310m³/h
- Sound power (Reg.(EU) nº65/2014): **45dB**(A), maximum: 63dB(A)
- 1 motor. Maximum energy consumption **120W**
- High efficiency LED lighting
- Energy Class: B

DECORATIVE BOX

GLADIUS 900 XGBK
CATA&CAN ROCA

Cod.: **02181302** EAN: **8422248082266**

- **Touch Control Panel** with authomatic shut-down timer and cleaning filters indicator
- 5 extraction levels, 4 + **1 TURBO**
- Extraction power (according to UNE/EN 61591): maximum: **750m³/h** - minimum: 200m³/h
- Sound power (Reg.(EU) nº65/2014): **40dB**(A), maximum: 64dB(A)
- BRUSHLESS motor. Ultra silent. Maximum energy consumption **130W**
- High efficiency Led lighting, adjustable intensity
- **Energy Class: A+**

LEGEND 9000 XGBK

Cod.: **02029207** EAN: **8422248101493**

- **Touch Control Panel** with authomatic shut-down timer and cleaning filters indicator
- 9 extraction levels
- Extraction power (according to UNE/EN 61591): **640m³/h** - 236m³/h
- Sound power (Reg.(EU) nº65/2014): **44dB**(A), maximum: 65dB(A)
- BRUSHLESS motor. Ultra silent. Maximum energy consumption **70W**
- **High efficiency Strip Led lighting**
- **Energy Class: A++**

LEGEND 7000 XGBK

Cod.: **02021202** EAN: **8422248101509**

- **Touch Control Panel** with authomatic shut-down timer and cleaning filters indicator
- 9 extraction levels
- Extraction power (according to UNE/EN 61591): **640m³/h** - 236m³/h
- Sound power (Reg.(EU) nº65/2014): **44dB**(A), maximum: 65dB(A)
- BRUSHLESS motor. Ultra silent. Maximum energy consumption **70W**
- **High efficiency Strip Led lighting**
- **Energy Class: A++**

LEGEND 6000 XGBK

Cod.: **02060208** EAN: **8422248102544**

- **Touch Control Panel** with authomatic shut-down timer and cleaning filters indicator
- 9 extraction levels
- Extraction power (according to UNE/EN 61591): **640m³/h** - 236m³/h
- Sound power (Reg.(EU) nº65/2014): **44dB**(A), maximum: 65dB(A)
- BRUSHLESS motor. Ultra silent. Maximum energy consumption **70W**
- **High efficiency Strip Led lighting**
- **Energy Class: A++**

LEGEND 900 X

Cod.: **02029305** EAN: **8422248068635**

- **Electronic Control Panel** with **digital display**, authomatic shut-down timer and cleaning filters indicator
- 5 extraction levels, 4 + **1 TURBO**
- Extraction power (according to UNE/EN 61591): **648m³/h** - 200m³/h
- Sound power (Reg.(EU) nº65/2014): **40dB**(A), maximum: 64dB(A)
- BRUSHLESS motor. Ultra silent. Maximum energy consumption **130W**
- **High efficiency Led lighting, adjustable intensity**
- **Energy Class: A**

LEGEND 700 X

Cod.: **02021306** EAN: **8422248068659**

- **Electronic Control Panel** with **digital display**, authomatic shut-down timer and cleaning filters indicator
- 5 extraction levels, 4 + **1 TURBO**
- Extraction power (according to UNE/EN 61591): **648m³/h** - 200m³/h
- Sound power (Reg.(EU) nº65/2014): **40dB**(A), maximum: 64dB(A)
- BRUSHLESS motor. Ultra silent. Maximum energy consumption **130W**
- **High efficiency Led lighting, adjustable intensity**
- **Energy Class: A**

SYGMA 12000 X

Cod.: **02132304** EAN: **8422248062282**

- **Electronic control Panel** with authomatic shut down timer
- 3 extraction levels, 2 + **1 TURBO**
- Extraction power (according to UNE/EN 61591): **850m³/h** - 340m³/h
- Sound power (Reg.(EU) nº65/2014): **50dB**(A), maximum: 65dB(A)
- BT3 motor. Extra silent. Maximum energy consumption **280W**
- High efficiency LED lighting
- **Energy Class: A**

SYGMA 9000 X

Cod.: **02075303** EAN: **8422248073042**

- **Electronic control Panel** with authomatic shut down timer
- 3 extraction levels, 2 + **1 TURBO**
- Extraction power (according to UNE/EN 61591): **850m³/h** - 340m³/h
- Sound power (Reg.(EU) nº65/2014): **50dB**(A), maximum: 65dB(A)
- BT3 motor. Extra silent. Maximum energy consumption **280W**
- High efficiency LED lighting
- **Energy Class: A**

SYGMA 7000 X

Cod.: **02021307** EAN: **8422248073059**

- **Electronic control Panel** with authomatic shut down timer
- 3 extraction levels, 2 + **1 TURBO**
- Extraction power (according to UNE/EN 61591): **850m³/h** - 340m³/h
- Sound power (Reg.(EU) nº65/2014): **50dB**(A), maximum: 65dB(A)
- BT3 motor. Extra silent. Maximum energy consumption **280W**
- High efficiency LED lighting
- **Energy Class: A**

SYGMA 6000 X

Cod.: **02060308** EAN: **8422248073066**

- **Electronic control Panel** with authomatic shut down timer
- 3 extraction levels, 2 + **1 TURBO**
- Extraction power (according to UNE/EN 61591): **850m³/h** - 340m³/h
- Sound power (Reg.(EU) nº65/2014): **50dB**(A), maximum: 65dB(A)
- BT3 motor. Extra silent. Maximum energy consumption **280W**
- High efficiency LED lighting
- **Energy Class: A**

SYGMA 900 BK

Cod.: **02075400** EAN: **8422248068079**

- **Electronic control Panel** with authomatic shut down timer
- 3 extraction levels, 2 + **1 TURBO**
- Extraction power (according to UNE/EN 61591): **790m³/h** - 320m³/h
- Sound power (Reg.(EU) nº65/2014): **50dB**(A), maximum: 65dB(A)
- BT2 motor. Extra silent. Maximum energy consumption **240W**
- **High efficiency LED lighting**
- Energy Class: C

S PLUS 900 X

Cod.: **02029600** EAN: **8422248087070**

- **Mechanical Control Panel**
- 3 extraction levels
- Extraction power (according to UNE/EN 61591): **645m³/h** - 385m³/h
- Sound power (Reg.(EU) nº65/2014): **57dB**(A), maximum: 71dB(A)
- Motor M3R. Extra silent. Maximum energy consumption **270W**
- **High efficiency LED lighting**
- Energy Class: C

DECORATIVE BOX

S PLUS 700 X
Cod.: **02021600** EAN: **8422248087087**

- **Mechanical Control Panel**
- 3 extraction levels
- Extraction power (according to UNE/EN 61591): **645m³/h** - 385m³/h
- Sound power (Reg.(EU) nº65/2014): **57dB**(A), maximum: 71dB(A)
- Motor M3R. Extra silent. Maximum energy consumption **270W**
- **High efficiency LED lighting**
- Energy Class: C

S PLUS 600 X
Cod.: **02060600** EAN: **8422248087094**

- **Mechanical Control Panel**
- 3 extraction levels
- Extraction power (according to UNE/EN 61591): **645m³/h** - 385m³/h
- Sound power (Reg.(EU) nº65/2014): **57dB**(A), maximum: 71dB(A)
- Motor M3R. Extra silent. Maximum energy consumption **270W**
- **High efficiency LED lighting**
- Energy Class: C

ST-9000 X
Cod.: **02029309** EAN: **8422248108706**

- **Mechanical Control Panel**
- 3 extraction levels
- Extraction power (according to UNE/EN 61591): **302m³/h** - 165m³/h
- Sound power (Reg.(EU) nº65/2014): **58dB**(A), maximum: 62dB(A)
- Maximum energy consumption **65W**
- **High efficiency Strip Led lighting**
- Energy Class: C

ST-7000 X
Cod.: **02021309** EAN: **8422248108690**

- **Mechanical Control Panel**
- 3 extraction levels
- Extraction power (according to UNE/EN 61591): **302m³/h** - 165m³/h
- Sound power (Reg.(EU) nº65/2014): **58dB**(A), maximum: 62dB(A)
- Maximum energy consumption **65W**
- **High efficiency Strip Led lighting**
- Energy Class: C

ST-6000 X
Cod.: **02060309** EAN: **8422248108683**

- **Mechanical Control Panel**
- 3 extraction levels
- Extraction power (according to UNE/EN 61591): **302m³/h** - 165m³/h
- Sound power (Reg.(EU) nº65/2014): **58dB**(A), maximum: 62dB(A)
- Maximum energy consumption **65W**
- **High efficiency Strip Led lighting**
- Energy Class: C

GAMMA 900 GX
Cod.: **02008210** EAN: **8422248061797**

- **Electronic control Panel** with authomatic shut down timer
- 3 extraction levels, 2 + **1 TURBO**
- Extraction power (according to UNE/EN 61591): **800m³/h** - 340m³/h
- Sound power (Reg.(EU) nº65/2014): **50dB**(A), maximum: 65dB(A)
- BT3 motor. Extra silent. Maximum energy consumption **280W**
- **High efficiency LED lighting**
- **Energy Class: A**

GAMMA 700 GX
Cod.: **02006205** EAN: **8422248061780**

- **Electronic control Panel** with authomatic shut down timer
- 3 extraction levels, 2 + **1 TURBO**
- Extraction power (according to UNE/EN 61591): **800m³/h** - 340m³/h
- Sound power (Reg.(EU) nº65/2014): **50dB**(A), maximum: 65dB(A)
- BT3 motor. Extra silent. Maximum energy consumption **280W**
- **High efficiency LED lighting**
- **Energy Class: A**

GAMMA 600 GX
Cod.: **02005219** EAN: **8422248061803**

- **Electronic control Panel** with authomatic shut down timer
- 3 extraction levels, 2 + **1 TURBO**
- Extraction power (according to UNE/EN 61591): **800m³/h** - 340m³/h
- Sound power (Reg.(EU) nº65/2014): **50dB**(A), maximum: 65dB(A)
- BT3 motor. Extra silent. Maximum energy consumption **280W**
- **High efficiency LED lighting**
- **Energy Class: A**

CG5-T900 X
Cod.: **02008299** EAN: **8422248108102**

- **Mechanical Control Panel**
- 3 extraction levels
- Extraction power (according to UNE/EN 61591): **495m³/h** - 300 m³/h
- Sound power (Reg.(EU) nº65/2014): **45dB**(A), maximum: 66dB(A)
- Maximum energy consumption **120W**
- **High efficiency LED lighting**
- Energy Class: B

CG5-T600 X
Cod.: **02005299** EAN: **8422248097413**

- **Mechanical Control Panel**
- 3 extraction levels
- Extraction power (according to UNE/EN 61591): **495m3/h** - 300 m3/h
- Sound power (Reg.(EU) nº65/2014): **45dB**(A), maximum: 66dB(A)
- Maximum energy consumption **120W**
- **High efficiency LED lighting**
- Energy Class: B

CHIMNEY

BETA 1200 X
Cod.: **02157309** EAN: **8422248062299**

- **Electronic control Panel** with authomatic shut down timer
- 3 extraction levels, 2 + **1 TURBO**
- Extraction power (according to UNE/EN 61591): **850m³/h** - 340m³/h
- Sound power (Reg.(EU) nº65/2014): **52dB**(A), maximum: 67dB(A)
- BT3 motor. Extra silent. Maximum energy consumption **280W**
- **High efficiency LED lighting**
- **Energy Class: A**

DECORATIVAS TRAPEZOIDALES

BETA 900 X
Cod.: **02051303** EAN: **8422248061827**

- **Electronic control Panel** with authomatic shut down timer
- 3 extraction levels, 2 + **1 TURBO**
- Extraction power (according to UNE/EN 61591): **850m³/h** - 340m³/h
- Sound power (Reg.(EU) nº65/2014): **52dB**(A), maximum: 67dB(A)
- BT3 motor. Extra silent. Maximum energy consumption **280W**
- **High efficiency LED lighting**
- **Energy Class: A**

BETA 700 X
Cod.: **02093303** EAN: **8422248061834**

- **Electronic control Panel** with authomatic shut down timer
- 3 extraction levels, 2 + **1 TURBO**
- Extraction power (according to UNE/EN 61591): **850m³/h** - 340m³/h
- Sound power (Reg.(EU) nº65/2014): **52dB**(A), maximum: 67dB(A)
- BT3 motor. Extra silent. Maximum energy consumption **280W**
- **High efficiency LED lighting**
- **Energy Class: A**

BETA 600 X
Cod.: **02050305** EAN: **8422248061841**

- **Electronic control Panel** with authomatic shut down timer
- 3 extraction levels, 2 + **1 TURBO**
- Extraction power (according to UNE/EN 61591): **850m³/h** - 340m³/h
- Sound power (Reg.(EU) nº65/2014): **52dB**(A), maximum: 67dB(A)
- BT3 motor. Extra silent. Maximum energy consumption **280W**
- **High efficiency LED lighting**
- **Energy Class: A**

OMEGA 7500 X
Cod.: **02003307** EAN: **8422248101615**

- **Mechanical control panel**
- 3 extraction levels
- Extraction power (according to UNE/EN 61591): **595m³/h** - 410m³/h
- Sound power (Reg.(EU) nº65/2014): **58dB**(A), maximum: 68dB(A)
- 1 motor. Maximum energy consumption **200W**
- **High efficiency Compact Strip LED lighting**
- **Energy Class: A**

OMEGA 900 X
Cod.: **02004305** EAN: **8422248087193**

- **Mechanical control panel**
- 3 extraction levels
- Extraction power (according to UNE/EN 61591): **645m³/h** - 385m³/h
- Sound power (Reg.(EU) nº65/2014): **58dB**(A), maximum: 72dB(A)
- M3R motor. Extra silent. Maximum energy consumption **270W**
- **High efficiency LED lighting**
- Energy Class: C

OMEGA 700 X
Cod.: **02003305** EAN: **8422248087209**

- **Mechanical control panel**
- 3 extraction levels
- Extraction power (according to UNE/EN 61591): **645m³/h** - 385m³/h
- Sound power (Reg.(EU) nº65/2014): **58dB**(A), maximum: 72dB(A)
- M3R motor. Extra silent. Maximum energy consumption **270W**
- **High efficiency LED lighting**
- Energy Class: C

OMEGA 600 X
Cod.: **02002305** EAN: **8422248087216**

- **Mechanical control panel**
- 3 extraction levels
- Extraction power (according to UNE/EN 61591): **645m³/h** - 385m³/h
- Sound power (Reg.(EU) nº65/2014): **58dB**(A), maximum: 72dB(A)
- M3R motor. Extra silent. Maximum energy consumption **270W**
- **High efficiency LED lighting**
- Energy Class: C

OMEGA 900 WH
Cod.: **02004005** EAN: **8422248087223**

- **Mechanical control panel**
- 3 extraction levels
- Extraction power (according to UNE/EN 61591): **645m³/h** - 385m³/h
- Sound power (Reg.(EU) nº65/2014): **58dB**(A), maximum: 72dB(A)
- M3R motor. Extra silent. Maximum energy consumption **270W**
- **High efficiency LED lighting**
- Energy Class: C

OMEGA 700 WH
Cod.: **02003005** EAN: **8422248087230**

- **Mechanical control panel**
- 3 extraction levels
- Extraction power (according to UNE/EN 61591): **645m³/h** - 385m³/h
- Sound power (Reg.(EU) nº65/2014): **58dB**(A), maximum: 72dB(A)
- M3R motor. Extra silent. Maximum energy consumption **270W**
- **High efficiency LED lighting**
- Energy Class: C

OMEGA 600 WH
Cod.: **02002005** EAN: **8422248087247**

- **Mechanical control panel**
- 3 extraction levels
- Extraction power (according to UNE/EN 61591): **645m³/h** - 385m³/h
- Sound power (Reg.(EU) nº65/2014): **58dB**(A), maximum: 72dB(A)
- M3R motor. Extra silent. Maximum energy consumption **270W**
- **High efficiency LED lighting**
- Energy Class: C

OMEGA 900 BK /L
Cod.: **02004403** EAN: **8422248087254**

- **Mechanical control panel**
- 3 extraction levels
- Extraction power (according to UNE/EN 61591): **645m³/h** - 385m³/h
- Sound power (Reg.(EU) nº65/2014): **58dB**(A), maximum: 72dB(A)
- M3R motor. Extra silent. Maximum energy consumption **270W**
- **High efficiency LED lighting**
- Energy Class: C

OMEGA 600 BK
Cod.: **02002403** EAN: **8422248087261**

- **Mechanical control panel**
- 3 extraction levels
- Extraction power (according to UNE/EN 61591): **645m³/h** - 385m³/h
- Sound power (Reg.(EU) nº65/2014): **58dB**(A), maximum: 72dB(A)
- M3R motor. Extra silent. Maximum energy consumption **270W**
- **High efficiency LED lighting**
- Energy Class: C

cata green innovation

V-9000 X
Cod.: **02004397** EAN: **8422248106368**

- **Mechanical control panel**
- 3 extraction levels
- Extraction power (according to UNE/EN 61591): **480m³/h** - 320m³/h
- Sound power (Reg.(EU) nº65/2014): **52dB**(A), maximum: 64dB(A)
- 1 motor. Extra silent. Maximum energy consumption **120W**
- **High efficiency Strip LED lighting**
- Energy Class: C

V-6000 X
Cod.: **02002397** EAN: **8422248106351**

- **Mechanical control panel**
- 3 extraction levels
- Extraction power (according to UNE/EN 61591): **480m³/h** - 320m³/h
- Sound power (Reg.(EU) nº65/2014): **52dB**(A), maximum: 64dB(A)
- 1 motor. Extra silent. Maximum energy consumption **120W**
- **High efficiency Strip LED lighting**
- Energy Class: C

V-6000 WH
Cod.: **02002097** EAN: **8422248108492**

- **Mechanical control panel**
- 3 extraction levels
- Extraction power (according to UNE/EN 61591): **480m³/h** - 320m³/h
- Sound power (Reg.(EU) nº65/2014): **52dB**(A), maximum: 64dB(A)
- 1 motor. Extra silent. Maximum energy consumption **120W**
- **High efficiency Strip LED lighting**
- Energy Class: C

V-7000 X
Cod.: **02085301** EAN: **8422248108478**

- **Mechanical control panel**
- 3 extraction levels
- Extraction power (according to UNE/EN 61591): **480m³/h** - 320m³/h
- Sound power (Reg.(EU) nº65/2014): **52dB**(A), maximum: 64dB(A)
- 1 motor. Extra silent. Maximum energy consumption **120W**
- **High efficiency Strip LED lighting**
- Energy Class: C

V-5000 X
Cod.: **02088306** EAN: **8422248108485**

- **Mechanical control panel**
- 3 extraction levels
- Extraction power (according to UNE/EN 61591): **480m³/h** - 320m³/h
- Sound power (Reg.(EU) nº65/2014): **52dB**(A), maximum: 64dB(A)
- 1 motor. Extra silent. Maximum energy consumption **120W**
- **High efficiency Strip LED lighting**
- Energy Class: C

V3-S900 X
Cod.: **02063207** EAN: **8422248108072**

- **Mechanical control panel**
- 3 extraction levels
- Extraction power (according to UNE/EN 61591): **350m³/h** - 215m³/h
- Sound power (Reg.(EU) nº65/2014): **55dB**(A), maximum: 65dB(A)
- 1 motor. Extra silent. Maximum energy consumption **65W**
- **High efficiency Strip LED lighting**
- Energy Class: B

V3-S600X
Cod.: **02061207** EAN: **8422248102711**

- **Mechanical control panel**
- 3 extraction levels
- Extraction power (according to UNE/EN 61591): **350m³/h** - 215m³/h
- Sound power (Reg.(EU) nº65/2014): **55dB**(A), maximum: 65dB(A)
- 1 motor. Extra silent. Maximum energy consumption **65W**
- **High efficiency Strip LED lighting**
- Energy Class: B

V3-S600 WH
Cod.: **02061007** EAN: **8422248102698**

- **Mechanical control panel**
- 3 extraction levels
- Extraction power (according to UNE/EN 61591): **350m³/h** - 215m³/h
- Sound power (Reg.(EU) nº65/2014): **55dB**(A), maximum: 65dB(A)
- 1 motor. Extra silent. Maximum energy consumption **65W**
- **High efficiency Strip LED lighting**
- Energy Class: B

Q-7790 BK
Cod.: **02149402** EAN: **8422248084161**

- **Mechanical control panel**
- 3 extraction levels
- Extraction power (according to UNE/EN 61591): **645m³/h** - 385m³/h
- Sound power (Reg.(EU) nº65/2014): **58dB**(A), maximum: 72dB(A)
- M3R motor. Extra silent. Maximum energy consumption **270W**
- **High efficiency LED lighting**
- Energy Class: C

Q-7760 BK
Cod.: **02148402** EAN: **8422248084178**

- **Mechanical control panel**
- 3 extraction levels
- Extraction power (according to UNE/EN 61591): **645m³/h** - 385m³/h
- Sound power (Reg.(EU) nº65/2014): **58dB**(A), maximum: 72dB(A)
- M3R motor. Extra silent. Maximum energy consumption **270W**
- **High efficiency LED lighting**
- Energy Class: C

CHORUS XGX
Cod.: **02165202** EAN: **8422248070492**

HOOD
- **Mechanical Control Panel**
- 3 extraction levels
- Extraction power (according to UNE/EN 61591): **400m³/h** - 210m³/h
- Minimum sound power: **50dB**(A), maximum: 62dB(A)
- Motor K7 PLUS. Extra silent. Maximum energy consumption **95W**
- **High efficiency LED lighting**
- Energy Class: C

MICROWAVE FEATURES
- 20 litre microwave
- Simultaneous 1,000 W quartz grill
- Five power levels, 700 W output
- Revolving dish ø 255 mm
- Timer from 0 to 95 minutes
- Automatic defrosting by time and weight
- 9 automatic access menus
- Fast start button
- Safety lock

NEBLIA 600 X /A
Cod.: **02052305** EAN: **8422248017602**

- **Mechanical control panel**
- 3 extraction levels
- Minimum sound power: **58dB**(A), maximum: 72dB(A)
- M3R motor. Extra silent. Maximum energy consumption **270W**
- Halogen lighting E-14

NEBLIA 500 INOX
Cod.: **02088310** EAN: **8422248039024**

- **Mechanical control panel**
- 3 extraction levels
- Minimum sound power: **58dB**(A), maximum: 72dB(A)
- M3R motor. Extra silent. Maximum energy consumption **270W**
- Halogen lighting E-14

NEBLIA 600 BK
Cod.: **02052400** EAN: **8422248017619**

- **Mechanical control panel**
- 3 extraction levels
- Minimum sound power: **58dB**(A), maximum: 72dB(A)
- M3R motor. Extra silent. Maximum energy consumption **270W**
- Halogen lighting E-14

NEBLIA 600 WH
Cod.: **02052000** EAN: **8422248017596**

- **Mechanical control panel**
- 3 extraction levels
- Minimum sound power: **58dB**(A), maximum: 72dB(A)
- M3R motor. Extra silent. Maximum energy consumption **270W**
- Halogen lighting E-14

NEBLIA 500 WH
Cod.: **02088010** EAN: **8422248039031**

- **Mechanical control panel**
- 3 extraction levels
- Minimum sound power: **58dB**(A), maximum: 72dB(A)
- M3R motor. Extra silent. Maximum energy consumption **270W**
- Halogen lighting E-14

NEBLIA IVORY
Cod.: **02052803** EAN: **8422248059824**

- **Mechanical control panel**
- 3 extraction levels
- Minimum sound power: **58dB**(A), maximum: 72dB(A)
- M3R motor. Extra silent. Maximum energy consumption **270W**
- Halogen lighting E-14

BUILT-IN HOODS

TENTA 90 GWH
Cod.: **02189005** EAN: **8422248093729**

AUTO

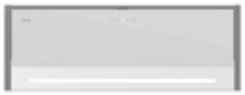

- **Touch Control Panel** with digital display, authomatic shut-down timer and cleaning filters indicator
- 6 extraction levels, 5 + **1 TURBO**
- Extraction power (according to UNE/EN 61591): **765,3m3/h** - 245m3/h
- Sound power (Reg.(EU) nº65/2014): **46dB**(A), maximum: 63dB(A)
- BRUSHLESS motor. Ultra silent. Maximum energy consumption **135W**
- **High-efficiency lighting by intensity-adjustable two-tone warm / natural LED STRIP**
- **Energy Class: A+**

CORONA X 120
Cod.: **02186207** EAN: **8422248105774**

- **Electronic Control Panel** with digital display authomatic shut-down timer
- 3 extraction levels, 2 + **1 TURBO**
- Extraction power (according to UNE/EN 61591): **850m³/h** - 340m³/h
- Sound power (Reg.(EU) nº65/2014): **50dB**(A), maximum: 65dB(A)
- BT3 motor. Ultra silent. Maximum energy consumption **283,5W**
- **High efficiency strip led lighting**
- **Energy Class: A**

CORONA X 90
Cod.: **02189306** EAN: **8422248082327**

- **Electronic Control Panel** with digital display authomatic shut-down timer
- 3 extraction levels, 2 + **1 TURBO**
- Extraction power (according to UNE/EN 61591): **850m³/h** - 340m³/h
- Sound power (Reg.(EU) nº65/2014): **50dB**(A), maximum: 65dB(A)
- BT3 motor. Ultra silent. Maximum energy consumption **283,5W**
- **High efficiency strip led lighting**
- **Energy Class: A**

CORONA X 70
Cod.: **02186202** EAN: **8422248082334**

- **Electronic Control Panel** with digital display authomatic shut-down timer
- 3 extraction levels, 2 + **1 TURBO**
- Extraction power (according to UNE/EN 61591): **850m³/h** - 340m³/h
- Sound power (Reg.(EU) nº65/2014): **50dB**(A), maximum: 65dB(A)
- BT3 motor. Ultra silent. Maximum energy consumption **283,5W**
- **High efficiency strip led lighting**
- **Energy Class: A**

CORONA X 60
Cod.: **02186205** EAN: **8422248084314**

- **Electronic Control Panel** with digital display authomatic shut-down timer
- 3 extraction levels, 2 + **1 TURBO**
- Extraction power (according to UNE/EN 61591): **850m³/h** - 340m³/h
- Sound power (Reg.(EU) nº65/2014): **50dB**(A), maximum: 65dB(A)
- BT3 motor. Ultra silent. Maximum energy consumption **283,5W**
- **High efficiency strip led lighting**
- **Energy Class: A**

ARMONIA 90 X
Cod.: **02189307** EAN: **8422248082341**

- **Mechanical control panel**
- 3 extraction levels
- Extraction power (according to UNE/EN 61591): **645m³/h** - 385m³/h
- Sound power (Reg.(EU) nº65/2014): **57dB**(A), maximum: 71dB(A)
- M3R motor. Ultra silent. Maximum energy consumption **270W**
- **High efficiency led lighting**
- Energy Class: C

ARMONIA 60 X
Cod.: **02186203** EAN: **8422248082358**

- **Mechanical control panel**
- 3 extraction levels
- Extraction power (according to UNE/EN 61591): **645m³/h** - 385m³/h
- Sound power (Reg.(EU) nº65/2014): **57dB**(A), maximum: 71dB(A)
- M3R motor. Ultra silent. Maximum energy consumption **270W**
- **High efficiency led lighting**
- Energy Class: C

ARMONIA 45 X
Cod.: **02186206** EAN: **8422248105804**

- **Mechanical control panel**
- 3 extraction levels
- Extraction power (according to UNE/EN 61591): **645m³/h** - 385m³/h
- Sound power (Reg.(EU) nº65/2014): **57dB**(A), maximum: 71dB(A)
- M3R motor. Ultra silent. Maximum energy consumption **270W**
- **High efficiency led lighting**
- Energy Class: C

GC DUAL 75 WH
Cod.: **02131207** EAN: **8422248078313**

- **Touch Control Panel** with authomatic shut-down timer and cleaning filters indicator
- 4 extraction levels, 3 + **1 TURBO**
- Extraction power (according to UNE/EN 61591): **820m³/h** - 340m³/h
- Sound power (Reg.(EU) nº65/2014): **50dB**(A), maximum: 65dB(A)
- BT3 motor. Extra silent. Maximum energy consumption **280W**
- **High efficiency Led lighting, adjustable intensity**
- **Energy Class: A**

GC DUAL 45 WH
Cod.: **02130207** EAN: **8422248078290**

- **Touch Control Panel** with authomatic shut-down timer and cleaning filters indicator
- 4 extraction levels, 3 + **1 TURBO**
- Extraction power (according to UNE/EN 61591): **820m³/h** - 340m³/h
- Sound power (Reg.(EU) nº65/2014): **50dB**(A), maximum: 65dB(A)
- BT3 motor. Extra silent. Maximum energy consumption **280W**
- **High efficiency Led lighting, adjustable intensity**
- **Energy Class: A**

GC DUAL 75 BK
Cod.: **02131208** EAN: **8422248078320**

- **Touch Control Panel** with authomatic shut-down timer and cleaning filters indicator
- 4 extraction levels, 3 + **1 TURBO**
- Extraction power (according to UNE/EN 61591): **820m³/h** - 340m³/h
- Sound power (Reg.(EU) nº65/2014): **50dB**(A), maximum: 65dB(A)
- BT3 motor. Extra silent. Maximum energy consumption **280W**
- **High efficiency Led lighting, adjustable intensity**
- **Energy Class: A**

GC DUAL 45 BK
Cod.: **02130208** EAN: **8422248078306**

- **Touch Control Panel** with authomatic shut-down timer and cleaning filters indicator
- 4 extraction levels, 3 + **1 TURBO**
- Extraction power (according to UNE/EN 61591): **820m³/h** - 340m³/h
- Sound power (Reg.(EU) nº65/2014): **50dB**(A), maximum: 65dB(A)
- BT3 motor. Extra silent. Maximum energy consumption **280W**
- **High efficiency Led lighting, adjustable intensity**
- **Energy Class: A**

GCX 83 SD
Cod.: **02031308** EAN: **8422248103589**

- **Touch Control Panel** with authomatic shut-down timer and cleaning filters indicator
- 4 extraction levels, 3 + **1 TURBO**
- Extraction power (according to UNE/EN 61591): **750m³/h** - 340m³/h
- Sound power (Reg.(EU) nº65/2014): **50dB**(A), maximum: 65dB(A)
- BT3 motor. Extra silent. Maximum energy consumption **280W**
- **High efficiency strip led lighting**
- **Energy Class: A**

GCX 53 SD
Cod.: **02030308** EAN: **8422248103572**

- **Touch Control Panel** with authomatic shut-down timer and cleaning filters indicator
- 4 extraction levels, 3 + **1 TURBO**
- Extraction power (according to UNE/EN 61591): **750m³/h** - 340m³/h
- Sound power (Reg.(EU) nº65/2014): **50dB**(A), maximum: 65dB(A)
- BT3 motor. Extra silent. Maximum energy consumption **280W**
- **High efficiency strip led lighting**
- **Energy Class: A**

GP75X
Cod.: **02131303** EAN: **8422248075190**

- **Electronic Control Panel** with digital display authomatic shut-down timer and cleaning filters indicator
- 4 extraction levels, 3 + **1 TURBO**
- Extraction power (according to UNE/EN 61591): **750m³/h** - 340m³/h
- Sound power (Reg.(EU) nº65/2014): **50dB**(A), maximum: 65dB(A)
- BT3 motor. Extra silent. Maximum energy consumption **280W**
- **High efficiency Led lighting, adjustable intensity**
- **Energy Class: A**

GP45X
Cod.: **02130303** EAN: **8422248075206**

- **Electronic Control Panel** with digital display authomatic shut-down timer and cleaning filters indicator
- 4 extraction levels, 3 + **1 TURBO**
- Extraction power (according to UNE/EN 61591): **750m³/h** - 340m³/h
- Sound power (Reg.(EU) nº65/2014): **50dB**(A), maximum: 65dB(A)
- BT3 motor. Extra silent. Maximum energy consumption **280W**
- **High efficiency Led lighting, adjustable intensity**
- **Energy Class: A**

GL 75 X
Cod.: **02131305** EAN: **8422248077835**

- **Touch Control Panel** with authomatic shut-down timer and cleaning filters indicator
- 4 extraction levels, 3 + **1 TURBO**
- Extraction power (according to UNE/EN 61591): **820m³/h** - 340m³/h
- Sound power (Reg.(EU) nº65/2014): **50dB**(A), maximum: 65dB(A)
- BT3 motor. Extra silent. Maximum energy consumption **280W**
- **High efficiency Led lighting, adjustable intensity**
- **Energy Class: A**

GL 45 X
Cod.: **02030305** EAN: **8422248077842**

- **Touch Control Panel** with authomatic shut-down timer and cleaning filters indicator
- 4 extraction levels, 3 + **1 TURBO**
- Extraction power (according to UNE/EN 61591): **820m³/h** - 340m³/h
- Sound power (Reg.(EU) nº65/2014): **50dB**(A), maximum: 65dB(A)
- BT3 motor. Extra silent. Maximum energy consumption **280W**
- **High efficiency Led lighting, adjustable intensity**
- **Energy Class: A**

GT-PLUS 45 X
Cod.: **02030307** EAN: **8422248087346**

- **Mechanical Control Panel**
- 3 extraction levels
- Extraction power (according to UNE/EN 61591): **645m³/h** - 300m³/h
- Sound power (Reg.(EU) nº65/2014): **50dB**(A), maximum: 65dB(A)
- BT2 motor. Extra silent. Maximum energy consumption **200W**
- **High efficiency Led lighting**
- Energy Class: C

GT-PLUS 45 WH
Cod.: **02030007** EAN: **8422248087353**

- **Mechanical Control Panel**
- 3 extraction levels
- Extraction power (according to UNE/EN 61591): **645m³/h** - 300m³/h
- Sound power (Reg.(EU) nº65/2014): **50dB**(A), maximum: 65dB(A)
- BT2 motor. Extra silent. Maximum energy consumption **200W**
- **High efficiency Led lighting**
- Energy Class: C

GT-PLUS 45 BK
Cod.: **02030407** EAN: **8422248087360**

- **Mechanical Control Panel**
- 3 extraction levels
- Extraction power (according to UNE/EN 61591): **645m³/h** - 300m³/h
- Sound power (Reg.(EU) nº65/2014): **50dB**(A), maximum: 65dB(A)
- BT2 motor. Extra silent. Maximum energy consumption **200W**
- **High efficiency Led lighting**
- Energy Class: C

GCB 73 X
Cod.: **02031300** EAN: **8422248108461**

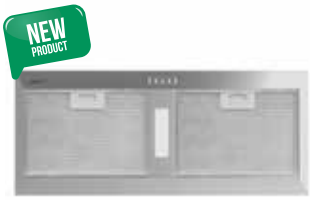

- **Mechanical Control Panel**
- 3 extraction levels
- Extraction power (according to UNE/EN 61591): **372m³/h** - 283m³/h
- Sound power (Reg.(EU) nº65/2014): **60dB**(A), maximum: 66dB(A)
- 1 motor. Extra silent. Maximum energy consumption **120W**
- **High efficiency Strip Led lighting**
- Energy Class: C

GCB 55 X
Cod.: **02030300** EAN: **8422248108454**

- **Mechanical Control Panel**
- 3 extraction levels
- Extraction power (according to UNE/EN 61591): **371m³/h** - 282m³/h
- Sound power (Reg.(EU) nº65/2014): **59dB**(A), maximum: 66dB(A)
- 1 motor. Extra silent. Maximum energy consumption **120W**
- **High efficiency Strip Led lighting**
- Energy Class: C

G 50 LUX GBK
Cod.: **02130402** EAN: **8422248082723**

- **Mechanical Control Panel**
- 3 extraction levels
- Extraction power (according to UNE/EN 61591): **400m³/h** - 210m³/h
- Sound power (Reg.(EU) nº65/2014): **50dB**(A), maximum: 62dB(A)
- K7 PLUS motor. Extra silent. Maximum energy consumption **95W**
- **High efficiency Led lighting**
- Energy Class: C

G 50 LUX GWH
Cod.: **02130005** EAN: **8422248082709**

- **Mechanical Control Panel**
- 3 extraction levels
- Extraction power (according to UNE/EN 61591): **400m³/h** - 210m³/h
- Sound power (Reg.(EU) nº65/2014): **50dB**(A), maximum: 62dB(A)
- K7 PLUS motor. Extra silent. Maximum energy consumption **95W**
- **High efficiency Led lighting**
- Energy Class: C

G 50 LUX X
Cod.: **02130302** EAN: **8422248082716**

- **Mechanical Control Panel**
- 3 extraction levels
- Extraction power (according to UNE/EN 61591): **400m³/h** - 210m³/h
- Sound power (Reg.(EU) nº65/2014): **50dB**(A), maximum: 62dB(A)
- K7 PLUS motor. Extra silent. Maximum energy consumption **95W**
- **High efficiency Led lighting**
- Energy Class: C

TELESCOPIC

G-45 X
Cod.: **02039305** EAN: **8422248087377**

- **Slider Control Panel**
- 2 extraction levels
- Extraction power (according to UNE/EN 61591): **390m³/h** - 150m³/h
- Sound power (Reg.(EU) nº65/2014): **45dB**(A), maximum: 57dB(A)
- Tangential motor. Extra silent. Maximum energy consumption **100W**
- Iluminación LED E-14
- Energy Class: D

G-45 WH
Cod.: **02039005** EAN: **8422248087384**

- **Slider Control Panel**
- 2 extraction levels
- Extraction power (according to UNE/EN 61591): **390m³/h** - 150m³/h
- Sound power (Reg.(EU) nº65/2014): **45dB**(A), maximum: 57dB(A)
- Tangential motor. Extra silent. Maximum energy consumption **100W**
- Iluminación LED E-14
- Energy Class: D

TFH-7600 GWH
Cod.: **02010203** EAN: **8422248061940**

- **Touch Control Panel** with authomatic shut-down timer and cleaning filters indicator
- 5 extraction levels, 4 + **1 TURBO**
- Extraction power (according to UNE/EN 61591): **820m³/h** - 200m³/h
- Sound power (Reg.(EU) nº65/2014): **40dB**(A), maximum: 64dB(A)
- BRUSHLESS motor. Extra silent. Maximum energy consumption **130W**
- High efficiency Led lighting, adjustable intensity
- **Energy Class: A**

TFH-7600 X
Cod.: **02010305** EAN: **8422248069588**

- **Touch Control Panel** with authomatic shut-down timer and cleaning filters indicator
- 5 extraction levels, 4 + **1 TURBO**
- Extraction power (according to UNE/EN 61591): **820m³/h** - 200m³/h
- Sound power (Reg.(EU) nº65/2014): **40dB**(A), maximum: 64dB(A)
- BRUSHLESS motor. Extra silent. Maximum energy consumption **130W**
- High efficiency Led lighting, adjustable intensity
- **Energy Class: A**

TFH 6630 X
Cod.: **02010300** EAN: **8422248082365**

- **Touch Control Panel** with digital diaplay, authomatic shut-down timer and cleaning filters indicator
- 6 extraction levels, 5 + **1 TURBO**
- Extraction power (according to UNE/EN 61591): **605m³/h** - 210m³/h
- Sound power (Reg.(EU) nº65/2014): **47dB**(A), maximum: 64dB(A)
- BRUSHLESS motor. Extra silent. Maximum energy consumption **90W**
- **High efficiency Strip Led lighting adjustable intensity**
- **Energy Class: A+**

TFH 6630 WH
Cod.: **02010301** EAN: **8422248082396**

- **Touch Control Panel** with digital diaplay, authomatic shut-down timer and cleaning filters indicator
- 6 extraction levels, 5 + **1 TURBO**
- Extraction power (according to UNE/EN 61591): **605m³/h** - 210m³/h
- Sound power (Reg.(EU) nº65/2014): **47dB**(A), maximum: 64dB(A)
- BRUSHLESS motor. Extra silent. Maximum energy consumption **90W**
- **High efficiency Strip Led lighting adjustable intensity**
- **Energy Class: A+**

TFH 6630 BK
Cod.: **02010302** EAN: **8422248082402**

- **Touch Control Panel** with digital diaplay, authomatic shut-down timer and cleaning filters indicator
- 6 extraction levels, 5 + **1 TURBO**
- Extraction power (according to UNE/EN 61591): **605m³/h** - 210m³/h
- Sound power (Reg.(EU) nº65/2014): **47dB**(A), maximum: 64dB(A)
- BRUSHLESS motor. Extra silent. Maximum energy consumption **90W**
- **High efficiency Strip Led lighting adjustable intensity**
- **Energy Class: A+**

TFH 6430 X
Cod.: **02010608** EAN: **8422248105750**

- **Touch Control Panel** with digital diaplay, authomatic shut-down timer and cleaning filters indicator
- 4 extraction levels, 3 + **1 TURBO**
- Extraction power (according to UNE/EN 61591): **395m³/h** - 120m³/h
- Sound power (Reg.(EU) nº65/2014): **45dB**(A), maximum: 57dB(A)
- BRUSHLESS motor. Extra silent. Maximum energy consumption **55W**
- **High efficiency Strip Led lighting adjustable intensity**
- **Energy Class: A+**

TFH 6430 GWH
Cod.: **02010008** EAN: **8422248105736**

- **Touch Control Panel** with digital diaplay, authomatic shut-down timer and cleaning filters indicator
- 4 extraction levels, 3 + **1 TURBO**
- Extraction power (according to UNE/EN 61591): **395m³/h** - 120m³/h
- Sound power (Reg.(EU) nº65/2014): **45dB**(A), maximum: 57dB(A)
- BRUSHLESS motor. Extra silent. Maximum energy consumption **55W**
- **High efficiency Strip Led lighting adjustable intensity**
- **Energy Class: A+**

TFH 6430 GBK
Cod.: **02010408** EAN: **8422248105767**

- **Touch Control Panel** with digital diaplay, authomatic shut-down timer and cleaning filters indicator
- 4 extraction levels, 3 + **1 TURBO**
- Extraction power (according to UNE/EN 61591): **395m³/h** - 120m³/h
- Sound power (Reg.(EU) nº65/2014): **45dB**(A), maximum: 57dB(A)
- BRUSHLESS motor. Extra silent. Maximum energy consumption **55W**
- **High efficiency Strip Led lighting adjustable intensity**
- **Energy Class: A+**

TF-2003 600 GWH /A
Cod.: **02017202** EAN: **8422248062008**

- **Mechanical control panel**
- 2 extraction levels
- Extraction power (according to UNE/EN 61591: **390m³/h** - 150m³/h
- Motor maximum airflow free outlet: **600m³/h**
- Sound power (Reg.(EU) nº65/2014): **45.5dB**(A), maximum: 57dB(A)
- Tangential motor. Extra silent. Maximum energy consumption 100W
- High efficiency LED lighting
- Easy-to-clean inner panel

TF-2003 600 GBK /B
Cod.: **02017203** EAN: **8422248062015**

- **Mechanical control panel**
- 2 extraction levels
- Extraction power (according to UNE/EN 61591: **390m³/h** - 150m³/h
- Motor maximum airflow free outlet: **600m³/h**
- Sound power (Reg.(EU) nº65/2014): **45.5dB**(A), maximum: 57dB(A)
- Tangential motor. Extra silent. Maximum energy consumption 100W
- High efficiency LED lighting

TF-2003 DURALUM 900
Cod.: **02094305** EAN: **8422248061964**

- **Mechanical control panel**
- 2 extraction levels
- Extraction power (according to UNE/EN 61591): **390m³/h** - 150m³/h
- Sound power (Reg.(EU) nº65/2014): **45.5dB**(A), maximum: 57dB(A)
- Tangential motor. Extra silent. Maximum energy consumption **100W**
- **High efficiency LED lighting**
- Energy Class: C

TF-2003 DURALUM 700
Cod.: **02089305** EAN: **8422248061971**

- **Mechanical control panel**
- 2 extraction levels
- Extraction power (according to UNE/EN 61591): **390m³/h** - 150m³/h
- Sound power (Reg.(EU) nº65/2014): **45.5dB**(A), maximum: 57dB(A)
- Tangential motor. Extra silent. Maximum energy consumption **100W**
- **High efficiency LED lighting**
- Energy Class: C

TF-2003 DURALUM 600
Cod.: **02017305** EAN: **8422248061988**

- **Mechanical control panel**
- 2 extraction levels
- Extraction power (according to UNE/EN 61591): **390m³/h** - 150m³/h
- Sound power (Reg.(EU) nº65/2014): **45.5dB**(A), maximum: 57dB(A)
- Tangential motor. Extra silent. Maximum energy consumption **100W**
- **High efficiency LED lighting**
- Energy Class: C

TF-2003 600 X
Cod.: **02017306** EAN: **8422248068819**

- **Mechanical control panel**
- 2 extraction levels
- Extraction power (according to UNE/EN 61591): **390m³/h** - 150m³/h
- Motor maximum airflow free outlet: 600m³/h
- Sound power (Reg.(EU) nº65/2014): **45.5dB**(A), maximum: 57dB(A)
- Tangential motor. Extra silent. Maximum energy consumption **100W**
- **High efficiency LED lighting**
- Energy Class: C

cata green innovation

TF-5260 X
Cod.: **02034310** EAN: **8422248082129**

- **Sliding Control Panel**
- 3 extraction levels
- Extraction power (according to UNE/EN 61591): **325m³/h** - 175m³/h (EU Model)
- Sound power (Reg.(EU) nº65/2014): **54dB**(A), maximum: 68dB(A)
- 2 Motor. Maximum energy consumption 2 x 65W
- LED E-14 lighting
- Energy Class: D

TF-5260 WH
Cod.: **02034501** EAN: **8422248082136**

- **Sliding Control Panel**
- 3 extraction levels
- Extraction power (according to UNE/EN 61591): **325m³/h** - 175m³/h (EU Model)
- Sound power (Reg.(EU) nº65/2014): **54dB**(A), maximum: 68dB(A)
- 2 Motor. Maximum energy consumption 2 x 65W
- LED E-14 lighting
- Energy Class: D

TFB-5160 X
Cod.: **02034606** EAN: **8422248101998**

- **Mechanical control panel**
- 2 extraction levels
- Extraction power (according to UNE/EN 61591): **300m³/h** - 160m³/h
- Motor maximum airflow free outlet: **700m³/h**
- Sound power (Reg.(EU) nº65/2014): **48dB**(A), maximum: 61dB(A)
- Tangential motor. Extra silent. Maximum energy consumption **65W**
- **High efficiency Strip LED lighting**
- Energy Class: C

TFB-5160 WH
130 €
Cod.: **02034107** EAN: **8422248102001**

- **Mechanical control panel**
- 2 extraction levels
- Extraction power (according to UNE/EN 61591): **300m³/h** - 160m³/h
- Sound power (Reg.(EU) nº65/2014): **48dB**(A), maximum: 61dB(A)
- Tangential motor. Extra silent. Maximum energy consumption **65W**
- **High efficiency Strip LED lighting**
- Energy Class: C

TFB-5160 BK
Cod.: **02034408** EAN: **8422248108096**

- **Mechanical control panel**
- 2 extraction levels
- Extraction power (according to UNE/EN 61591): **300m³/h** - 160m³/h
- Sound power (Reg.(EU) nº65/2014): **48dB**(A), maximum: 61dB(A)
- Tangential motor. Extra silent. Maximum energy consumption **65W**
- **High efficiency Strip LED lighting**
- Energy Class: C

TF-5250 X
Cod.: **02097305** EAN: **8422248086264**

- **Sliding Control Panel**
- 3 extraction levels
- Extraction power (according to UNE/EN 61591): **325m³/h** - 175m³/h
- Sound power (Reg.(EU) nº65/2014): **54dB**(A), maximum: 68dB(A)
- 2 Motor. Maximum energy consumption **2 x 65W**
- **LED E-14 lighting**
- Energy Class: D

TF-5250 WH
Cod.: **02097002** EAN: **8422248086271**

- **Sliding Control Panel**
- 3 extraction levels
- Extraction power (according to UNE/EN 61591): **325m³/h** - 175m³/h
- Sound power (Reg.(EU) nº65/2014): **54dB**(A), maximum: 68dB(A)
- 2 Motor. Maximum energy consumption **2 x 65W**
- **LED E-14 lighting**
- Energy Class: D

TFB-5150 X
Cod.: **02097306** EAN: **8422248102018**

- **Mechanical control panel**
- 2 extraction levels
- Extraction power (according to UNE/EN 61591): **300m³/h** - 160m³/h
- Sound power (Reg.(EU) nº65/2014): **48dB**(A), maximum: 61dB(A)
- Tangential motor. Extra silent. Maximum energy consumption **65W**
- **High efficiency Strip LED lighting**
- Energy Class: C

CONVENTIONAL

TF-5060 X
Cod.: **02033309** EAN: **8422248086059**

- **Sliding Control Panel**
- 3 extraction levels
- Extraction power (according to UNE/EN 61591): **197m³/h** - 96m³/h
- Sound power (Reg.(EU) nº65/2014): 51dB(A), maximum: 65dB(A)
- 1 Motor. Maximum energy consumption **65W**
- Max. pressure 325 Pa
- Energy Class: C

F-2060 X
Cod.: **02011309** EAN: **8422248082075**

- **Mechanical control panel**
- 3 extraction levels
- - Extraction power (according to UNE/EN 61591): **195m³/h** - 108m³/h
- - Motor maximum airflow free outlet: **350m³/h**
- - Sound power (Reg.(EU) nº65/2014): **56dB**(A), maximum: 68dB(A)
- 1 motor x **60W**
- E-14 LED lighting
- Energy Class: C

S-BOX X
Cod.: **02001301** EAN: **8422248062039**

- **Mechanical control panel**
- 3 extraction levels
- Extraction power (according to UNE/EN 61591): **390m³/h** - 150m³/h
- Sound power (Reg.(EU) nº65/2014): **45dB**(A), maximum: 57dB(A)
- Tangential motor. Extra silent. Maximum energy consumption **100W**
- **Low consumption lighting**
- Energy Class: C

LF-2060 X
Cod.: **02011317** EAN: **8422248105231**

- **Mechanical control panel**
- 3 extraction levels
- Extraction power (according to UNE/EN 61591): **195m³/h** - 107m³/h
- Sound power (Reg.(EU) nº65/2014): **56dB**(A), maximum: 68dB(A)
- 1 motor x **60W**
- **E-14 LED lighting**
- Energy Class: C

cata green innovation

LF-2060 WH — 90 €
Cod.: **02011017** EAN: **8422248105224**

- **Mechanical control panel**
- 3 extraction levels
- Extraction power (according to UNE/EN 61591): **195m³/h** - 107m³/h
- Sound power (Reg.(EU) nº65/2014): **56dB**(A), maximum: 68dB(A)
- 1 motor x **60W**
- **E-14 LED lighting**
- Energy Class: C

F-2050 X
Cod.: **02015306** EAN: **8422248086103**

- **Mechanical control panel**
- 3 extraction levels
- - Extraction power (according to UNE/EN 61591): **195m3/h** - 108m3/h
- - Sound power (Reg.(EU) nº65/2014): **56dB**(A), maximum: 68dB(A)
- 1 motor x **60W**
- E-14 LED lighting
- Energy Class: C

F-2060 WH
Cod.: **02011012** EAN: **8422248082105**

- **Mechanical control panel**
- 3 extraction levels
- - Extraction power (according to UNE/EN 61591): **195m3/h** - 108m3/h
- - Sound power (Reg.(EU) nº65/2014): **56dB**(A), maximum: 68dB(A)
- 1 motor x **60W**
- E-14 LED lighting
- Energy Class: C

F-2050 WH
Cod.: **02015006** EAN: **8422248086110**

- **Mechanical control panel**
- 3 extraction levels
- - Extraction power (according to UNE/EN 61591): **195m3/h** - 108m3/h
- - Sound power (Reg.(EU) nº65/2014): **56dB**(A), maximum: 68dB(A)
- 1 motor x **60W**
- E-14 LED lighting
- Energy Class: C

F-2060 BK
Cod.: **02011408** EAN: **8422248083027**

- **Mechanical control panel**
- 3 extraction levels
- Extraction power (according to UNE/EN 61591): **195m3/h** - 108m3/h
- Sound power (Reg.(EU) nº65/2014): **56dB**(A), maximum: 68dB(A)
- 1 motor x **60W**
- E-14 LED lighting
- Energy Class: C

F-2290 X
Cod.: **02014302** EAN: **8422248168946**

- **Sliding control panel**
- 3 extraction levels
- Minimum sound power: **59dB**(A), maximum: 65dB(A)
- 2 motors. Maximum energy consumption **2 x 125W**

P-3260 X
Cod.: **02026306** EAN: **8422248085854**

- **Mechanical control panel**
- 3 extraction levels
- Extraction power (according to UNE/EN 61591): **325m³/h** - 200m³/h
- Minimum sound power: **60dB**(A), maximum: 67dB(A)
- **2 motors x 70W**
- **E-14 LED lighting**
- Energy Class: D

P-3260 WH
Cod.: **02026006** EAN: **8422248085861**

- **Mechanical control panel**
- 3 extraction levels
- Extraction power (according to UNE/EN 61591): **325m³/h** - 200m³/h
- Minimum sound power: **60dB**(A), maximum: 67dB(A)
- **2 motors x 70W**
- **E-14 LED lighting**
- Energy Class: D

P-3060 X
Cod.: **02028307** EAN: **8422248086073**

- **Mechanical control panel**
- 3 extraction levels
- Extraction power (according to UNE/EN 61591): **191m³/h** - 94m³/h
- Minimum sound power: **46dB**(A), maximum: 63dB(A)
- **1 motor x 60W**
- **E-14 LED lighting**
- Energy Class: C

P-3050 X
Cod.: **02096303** EAN: **8422248086097**

- **Mechanical control panel**
- 3 extraction levels
- Extraction power (according to UNE/EN 61591): **191m³/h** - 94m³/h
- Minimum sound power: **46dB**(A), maximum: 63dB(A)
- **1 motor x 60W**
- **E-14 LED lighting**
- Energy Class: C

P-3060 WH
Cod.: **02028008** EAN: **8422248086080**

- **Mechanical control panel**
- 3 extraction levels
- Extraction power (according to UNE/EN 61591): **191m³/h** - 94m³/h
- Minimum sound power: **46dB**(A), maximum: 63dB(A)
- **1 motor x 60W**
- **E-14 LED lighting**
- Energy Class: C

P-3050 WH
Cod.: **02096005** EAN: **8422248086288**

- **Mechanical control panel**
- 3 extraction levels
- Extraction power (according to UNE/EN 61591): **191m³/h** - 94m³/h
- Minimum sound power: **46dB**(A), maximum: 63dB(A)
- **1 motor x 60W**
- **E-14 LED lighting**
- Energy Class: C

cata green innovation

MULTIFUNCTION OVENS

MT 9011 PRO BK
Cod.: **07047400** EAN: **8422248080637**

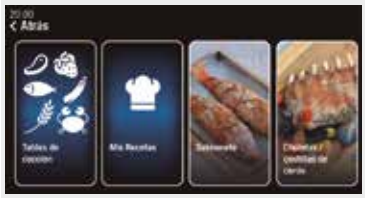

- Multifunction oven with Fan forced oven - **14 functions**
- **TFT Control**
- **Recipes by El Celler de Can Roca**
- **Cooking Tables with function & Temperature** recomendation for extensive type of food
- Chromed support with 5 cooking levels
- 1 Telescopic guide full extension adaptable to any level
- Triple glazed cool door with tangential ventilation
- **Soft closing door**
- Accessories: **Deep tray**, tray and grid
- **Automatic AquaSmart Cleaning system**
- Net capacity **72 liters**
- **Energy class A**

cata & Can Roca

MT 8012 BK
Cod.: **07002411** EAN: **8422248094009**

- Multifunction oven with Fan forced oven - **11 functions**
- **Touch control panel**
- Display cooking programmer with temperature and times
- Chromed support with 5 cooking levels
- 1 Telescopic guide full extension adaptable to any level
- 3 glazed cool door with tangential ventilation
- Accessories: **Deep tray**, tray, grid and pizza stone
- **Automatic AquaSmart Cleaning system**
- Net capacity **72 liters**
- **Energy Class A**

MT 8012 WH
Cod.: **07002412** EAN: **8422248094016**

- Multifunction oven with Fan forced oven - **11 functions**
- **Touch control panel**
- Display cooking programmer with temperature and times
- Chromed support with 5 cooking levels
- 1 Telescopic guide full extension adaptable to any level
- 3 glazed cool door with tangential ventilation
- Accessories: **Deep tray**, tray, grid and pizza stone
- **Automatic AquaSmart Cleaning system**
- Net capacity **72 liters**
- **Energy Class A**

PR 6011 XGBK
Cod.: **07001006** EAN: **8422248103350**

- **Pyrolytic oven** with **Fan forced** oven - 10 functions
- **Push/Pull controls**
- Display cooking programmer with temperature and times
- Chromed support with 5 cooking levels
- **1 Telescopic guide** adaptable to any level 50%
- Glazed cool door with tangential ventilation 4 glasses
- Accessories: tray and grid
- **Pyrolytic cleaning with 2 levels (90/120 min)**
- Net capacity **70 liters**
- **Energy class A**

MDS 7208 X
Cod.: **07001507** EAN: **8422248095464**

- **Multifunction oven** with **Fan forced** oven - 8 functions
- **Push/Pull controls**
- Display cooking programmer with temperature and times
- 5 levels for placing easy-to-move trays
- 1 removable telescopic guide adaptable to any level
- Triple glazed cool door with tangential ventilation
- Soft closing door
- Accessories: **Deep tray**, tray and grid
- AquaSmart Cleaning system
- Net capacity **72 liters**
- **Energy Class A**

MDS 7208 WH
Cod.: **07001005** EAN: **8422248095587**

- **Multifunction oven** with **Fan forced** oven - 8 functions
- **Push/Pull controls**
- Display cooking programmer with temperature and times
- 5 levels for placing easy-to-move trays
- 1 removable telescopic guide adaptable to any level
- Triple glazed cool door with tangential ventilation
- Soft closing door
- Accessories: **Deep tray**, tray and grid
- AquaSmart Cleaning system
- Net capacity **72 liters**
- **Energy Class A**

MDS 7208 BK
Cod.: **07001403** EAN: **8422248095594**

- **Multifunction oven** with **Fan forced** oven - 8 functions
- **Push/Pull controls**
- Display cooking programmer with temperature and times
- 5 levels for placing easy-to-move trays
- 1 removable telescopic guide adaptable to any level
- Triple glazed cool door with tangential ventilation
- Soft closing door
- Accessories: **Deep tray**, tray and grid
- AquaSmart Cleaning system
- Net capacity **72 liters**
- **Energy Class A**

MDS 7206 X
Cod.: **07034602** EAN: **8422248095556**

- **Multifunction oven** - 6 functions
- **Push/Pull controls**
- Display cooking programmer with temperature and times
- 5 cooking levels for placing easy-to-move trays
- 1 removable telescopic guide adaptable to any level
- Double glazed cool door with tangential ventilation
- Accessories: **Deep tray** and grid
- AquaSmart Cleaning system
- Net capacity **72 liters**
- **Energy Class A**

MD 6106X
Cod.: **07033303** EAN: **8422248076029**

- **Multifunction oven** - 6 functions
- Display cooking programmer with temperature and times
- 5 levels for placing trays
- Double glazed cool door with tangential ventilation
- Accessories: tray and grid
- **AquaSmart Cleaning system**
- Net capacity **60 liters**
- **Energy Class A**

MDS 7206 WH
Cod.: **07034100** EAN: **8422248095563**

- **Multifunction oven** - 6 functions
- **Push/Pull controls**
- Display cooking programmer with temperature and times
- 5 levels for placing easy-to-move trays
- 1 removable telescopic guide adaptable to any level
- Double glazed cool door with tangential ventilation
- Accessories: **Deep tray** and grid
- **AquaSmart Cleaning system**
- Net capacity **72 liters**
- **Energy Class A**

MDS 7206 BK
Cod.: **07034506** EAN: **8422248095570**

- **Multifunction oven** - 6 functions
- **Push/Pull controls**
- Display cooking programmer with temperature and times
- 5 levels for placing easy-to-move trays
- 1 removable telescopic guide adaptable to any level
- Double glazed cool door with tangential ventilation
- Accessories: **Deep tray** and grid
- **AquaSmart Cleaning system**
- Net capacity **72 liters**
- **Energy Class A**

ME 7207 BK
Cod.: **07034404** EAN: **8422248081849**

- **Multifunction oven** - 6 functions
- **Mechanical cooking programmer**
- Chromed support with 5 cooking levels
- 1 Telescopic guide adaptable to any level
- Double glazed cool door with tangential ventilation
- Accessories: **Deep tray** and grid
- **AquaSmart Cleaning system**
- Net capacity **72 liters**
- **Energy Class A**

MDS 7205 X
Cod.: **07034601** EAN: **8422248095457**

- Display cooking programmer with temperature and times
- 5 cooking levels for placing easy-to-move trays
- Double glazed cool door with tangential ventilation
- Accessories: **Deep tray** and grid
- **AquaSmart Cleaning system**
- Net capacity **72 liters**
- **Energy Class A**

MES 7106 X
Cod.: **07044606** EAN: **8422248095440**

- **Multifunction oven** - 6 functions
- **Mechanical cooking programmer** with automatic stop
- 5 levels for placing easy-to-move trays
- **1 removable telescopic** guide adaptable to any level
- Double glazed cool door with tangential ventilation
- Accessories: **Deep tray** and grid
- **AquaSmart Cleaning system**
- Net capacity **72 liters**
- **Energy Class A**

ME 6206 X
Cod.: **07007303** EAN: **8422248075886**

- **Multifunction oven** - 6 functions
- **Mechanical cooking programmer**
- 5 levels for placing trays
- Double glazed cool door with tangential ventilation
- Accessories: tray and grid
- **AquaSmart Cleaning system**
- Net capacity **60 liters**
- **Energy Class A**

STATIC OVENS

SES 7104 X
Cod.: **07044605** EAN: **8422248095433**

- **Static oven** - 4 functions
- Mechanical cooking programmer with automatic stop
- 5 levels for placing easy-to-move trays
- Double glazed cool door with tangential ventilation
- Accessories: **Deep tray** and grid
- **AquaSmart Cleaning system**
- Net capacity **77 liters**
- **Energy Class A**

SES 7104 WH
Cod.: **07044101** EAN: **8422248095549**

- **Static oven** - 4 functions
- Mechanical cooking programmer with automatic stop
- 5 levels for placing easy-to-move trays
- Double glazed cool door with tangential ventilation
- Accessories: **Deep tray** and grid
- **AquaSmart Cleaning system**
- Net capacity **77 liters**
- **Energy Class A**

SE 6204 X
Cod.: **07044600** EAN: **8422248075831**

- **Static oven** - 4 functions
- 5 levels for placing trays
- Double glazed cool door with tangential ventilation
- Accessories: tray
- Net capacity **65 liters**
- **Energy Class A**

SES 7004 X
Cod.: **07044603** EAN: **8422248095426**

- **Static oven** - 4 functions
- 5 levels for placing easy-to-move trays
- Double glazed cool door with tangential ventilation
- Accessories: Tray and grid
- **AquaSmart Cleaning system**
- Net capacity **72 liters**
- **Energy Class A**

SES 7004 BK
Cod.: **07044408** EAN: **8422248095532**

- **Static oven** - 4 functions
- 5 levels for placing easy-to-move trays
- Double glazed cool door with tangential ventilation
- Accessories: Tray and grid
- **AquaSmart Cleaning system**
- Net capacity **72 liters**
- **Energy Class A**

SES 7004 WH
Cod.: **07044100** EAN: **8422248095525**

- **Static oven** - 4 functions
- 5 levels for placing easy-to-move trays
- Double glazed cool door with tangential ventilation
- Accessories: Tray and grid
- **AquaSmart Cleaning system**
- Net capacity **72 liters**
- **Energy Class A**

RUSTIC OVENS

MRA 7108 BK
Cod.: **07035409** EAN: **8422248077026**

- **Multifunction oven** - 7 functions
- **Mechanical cooking programmer**
- Temperature range 40ºC-240ºC
- Panoramic easy-to-clean full glass door with removable inner glass
- Double glazed cool door with tangential ventilation
- **AquaSmart cleaning system**
- Net capacity **60 liters**
- **Energy Class A**

MRA 7108 WH
Cod.: **07035009** EAN: **8422248077033**

- **Multifunction oven** - 7 functions
- **Mechanical cooking programmer**
- Temperature range 40ºC-240ºC
- Panoramic easy-to-clean full glass door with removable inner glass
- Double glazed cool door with tangential ventilation
- **AquaSmart cleaning system**
- Net capacity **60 liters**
- **Energy Class A**

COMPACT OVENS

CMD 5008 X
Cod.: **07003307** EAN: **8422248067881**

- **Multifunction oven** - 8 functions
- **Push/Pull controls**
- **Digital** cooking programmer
- 4 levels for placing easy-to-move trays
- **1 Telescopic guide** full extension adaptable to any level
- Triple glazed cool door with tangential ventilation
- Accessories: **Deep tray** and grid
- **AquaSmart Cleaning system**
- **Built into a 45 cm unit**
- Net capacity **40 liters**
- **Energy Class A**

MD 5008 WH
Cod.: **07003000** EAN: **8422248067898**

- **Multifunction oven** - 8 functions
- **Push/Pull controls**
- **Digital** cooking programmer
- 4 levels for placing easy-to-move trays
- **1 Telescopic guide** full extension adaptable to any level
- Triple glazed cool door with tangential ventilation
- Accessories: **Deep tray** and grid
- **AquaSmart Cleaning system**
- **Built into a 45 cm unit**
- Net capacity **40 liters**
- **Energy Class A**

ME 4006X
Cod.: **07003305** EAN: **8422248067867**

- **Multifunction oven** - 6 functions
- **Mechanical** cooking programmer
- 4 levels for placing easy-to-move trays
- Triple glazed cool door with tangential ventilation
- Accessories: tray and grid
- **AquaSmart Cleaning system**
- **Built into a 45 cm unit**
- Net capacity **40 liters**
- **Energy Class A**

90cm WIDE OVEN

CMD 9208 BK
Cod.: **07039305** EAN: **8422248093156**

- **Multifunction oven** - 8 functions
- **Push/Pull controls**
- Digital cooking programmer
- 5 levels for placing easy-to-move trays
- Triple glazed cool door
- Accessories: **Deep tray** and grid
- Net capacity **93 liters**
- **Energy Class A**

SUITABLE FOR 50cm CABINET

CDP 780 AS BK
Cod.: **07001401** EAN: **8422248059503**

- **Multifunction oven** - 8 functions
- **Push/Pull controls**
- **Digital** cooking programmer
- 4 levels for placing easy-to-move trays
- 1 telescopic guide
- Double glazed cool door with tangential ventilation
- Accessories: **Deep tray** and grid
- **AquaSmart Cleaning system**
- Net capacity **50 liters**
- **Energy Class A**

CM 760 AS BK
Cod.: **07032307** EAN: **8422248059497**

- **Multifunction oven** - 6 functions
- **Mechanical cooking programmer**
- 4 levels for placing easy-to-move trays
- Double glazed cool door with tangential ventilation
- Accessories: **Deep tray** and grid
- **AquaSmart Cleaning system**
- Net capacity **50 liters**
- **Energy Class A**

CM 760 AS WH
Cod.: **07032002** EAN: **8422248058568**

- **Multifunction oven** - 6 functions
- **Mechanical cooking programmer**
- 4 levels for placing easy-to-move trays
- Double glazed cool door with tangential ventilation
- Accessories: **Deep tray** and grid
- **AquaSmart Cleaning system**
- Net capacity **50 liters**
- **Energy Class A**

MICROWAVES cata & Can Roca

MC 25 GTC BK
Cod.: **07510400** EAN: **8422248055277**

- **25 litre** built-in microwave
- Simultaneous 1,000 W quartz grill
- Five power levels, 900 W output
- Timer from 0 to 95 minutes
- Automatic defrosting by time and weight
- 8 automatic access menus
- Fast start button

MC 25 GTC WH
Cod.: **07510000** EAN: **8422248055260**

- **25 litre** built-in microwave
- Simultaneous 1,000 W quartz grill
- Five power levels, 900 W output
- Timer from 0 to 95 minutes
- Automatic defrosting by time and weight
- 8 automatic access menus
- Fast start button

BUILT IN MICROWAVES

MC 32 DC
Cod.: **07510303** EAN: **8422248055253**

- **32 litre** built-in microwave
- Simultaneous 1,100 W grill
- Five power levels, 900 W output
- Timer from 0 to 95 minutes
- Automatic defrosting by time and weight
- 10 automatic access menus
- Fast start button

MC 25 D ENC
Cod.: **07510300** EAN: **8422248048453**

- **25 litre** built-in microwave
- Simultaneous 1,000 W quartz grill
- Five power levels, 900 W output
- Timer from 0 to 95 minutes
- Automatic defrosting by time and weight
- 8 automatic access menus
- Fast start button

MW BI2505DCG WH
Cod.: **07511002** EAN: **8422248100144**

- **25 litre** built-in microwave
- 1200 W grill
- Five power levels, 900 W output
- Timer from 0 to 60 minutes
- Defrosting by time and weight
- 8 auto cook menus

MW BI2505DCG BK
Cod.: **07511402** EAN: **8422248100151**

- **25 litre** built-in microwave
- 1200 W grill
- Five power levels, 900 W output
- Timer from 0 to 60 minutes
- Defrosting by time and weight
- 8 auto cook menus

MW BI2005DCG WH
Cod.: **07510007** EAN: **8422248099677**

- **20 litre** built-in microwave
- 800 W grill
- Five power levels, 700 W output
- Timer from 0 to 60 minutes
- Defrosting by time and weight
- 6 auto cook menus

MW BI2005DCG BK
Cod.: **07511401** EAN: **8422248100137**

- **20 litre** built-in microwave
- 800 W grill
- Five power levels, 700 W output
- Timer from 0 to 60 minutes
- Defrosting by time and weight
- 6 auto cook menus

MW BI2001DCG SS
Cod.: **07510309** EAN: **8422248099684**

- **20 litre** built-in microwave
- 800 W grill
- Five power levels, 700 W output
- Timer from 0 to 60 minutes
- Defrosting by time and weight
- 6 auto cook menus

MW BI2000MG SS
Cod.: **07511305** EAN: **8422248099998**

- **20 litre** built-in microwave
- 800 W grill
- Five power levels, 700 W output
- Timer from 0 to 30 minutes
- Defrosting by weight

MMA 20 WH
Cod.: **07510003** EAN: **8422248077187**

- **20 litre** built-in microwave
- Simultaneous 1,000 W grill
- Five power levels, 800 W output
- Timer from 0 to 35 minutes
- Automatic defrosting by time and weight
- Fast start button

MMA 20 X
Cod.: **07510308** EAN: **8422248077170**

- **20 litre** built-in microwave
- Simultaneous 1,000 W grill
- Five power levels, 800 W output
- Timer from 0 to 35 minutes
- Automatic defrosting by time and weight
- Fast start button

MC 20 D ENC
Cod.: **07510301** EAN: **8422248049450**

- **20 litre** built-in microwave
- Simultaneous 1,000 W grill
- Five power levels, 800 W output
- Timer from 0 to 95 minutes
- Automatic defrosting by time and weight
- 8 automatic access menus
- Fast start button

MC 20 IX
Cod.: **07510306** EAN: **8422248058476**

- **20 litre** built-in microwave
- Simultaneous 1,000 W grill
- Five power levels, 800 W output
- Timer from 0 to 95 minutes
- Automatic defrosting by time and weight
- Fast start button

ROCOOK cata & Can Roca

ROCOOK INDUCTION BK
Cod.: **08003400** EAN: **8422248068307**

- ROCOOK Induction black hob
  - Cooking area of ø 230 mm
  - Bluetooth 4.0 (link with temperature sensor)
  - Power: 2 kW
  - Weight: 3.7 kg
  - Product measurements: 295x365x64 mm
- Temperature sensor
- Adapter for shallow pans
- European plug (type F)

ROCOOK INDUCTION GR
Cod.: **08003300** EAN: **8422248069458**

- ROCOOK Induction grey hob
  - Cooking area of ø 230 mm
  - Bluetooth 4.0 (link with temperature sensor)
  - Power: 2 kW
  - Weight: 3.7 kg
  - Product measurements: 295x365x64 mm
- Temperature sensor
- Adapter for shallow pans
- European plug (type F)

ROCOOK ADVANCED KIT EN GR
Cod.: **08007305** EAN: **8422248070775**

- ROCOOK Induction grey hob
  -Cooking area of ø 230 mm
  -Bluetooth 4.0 (link with temperature sensor)
  -Power: 2 kW /Weight: 3.7 kg
  -Product measurements: 295x365x64 mm
- Temperature sensor / Core temperature probe
- Vacuum pump / Bag for sensors
- Sous-vide cooking bags 21x22 / 25.5x28
- 3 bag clips / Adapter for shallow pans
- Cooking mesh
- Adaptable suction lid ø 320 mm / Steamer ø 220 mm
- "Firts Steps" course / "Beyond the basics" course
- Book "Cooking with Joan Roca at low temperatures"
- European plug (type F)

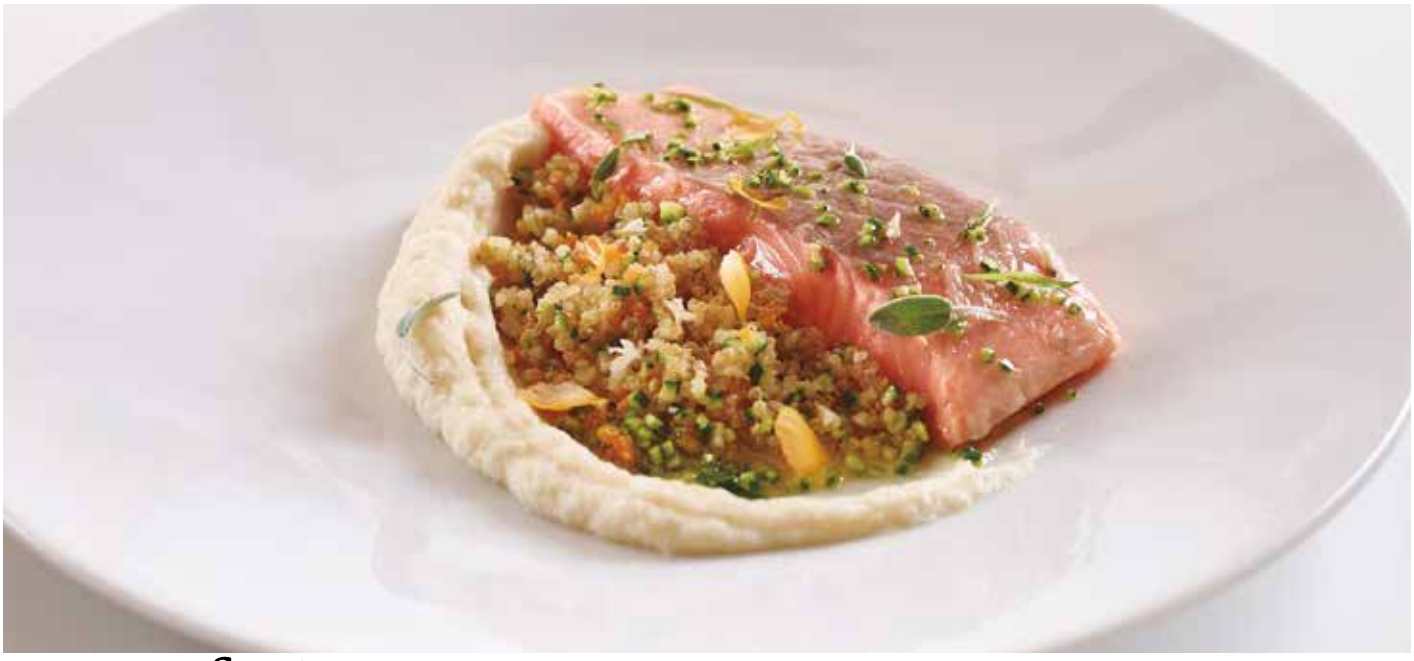

INDUCTION cata & Can Roca

IDF 9012 PRO BK
Cod.: **08024202** EAN: **8422248079631**

- **5 cooking areas:** 4 zones of 210x200mm, 1 zone of Ø300mm. 2 modular zones of 210x400mm
- **5" TFT touch control**
- Temperature control functions Fast & Precise (40ºC-180ºC)
- **PRO connectivity for full control of the CATA PRO hoods**
- 9 adjustable power levels + Booster
- Pause Function
- Timer function for each area
- **Total power 9kW (limitable)**

IDF 8021 PRO BK
Cod.: **08081206** EAN: **8422248079648**

- **4 cooking areas:** 2 zones of 210x200mm, 1 zone of Ø300mm, 1 zone of Ø180mm. 1 modular zone of 210x400mm
- **5" TFT touch control**
- Temperature control functions Fast & Precise (40ºC-180ºC)
- **PRO connectivity for full control of the CATA PRO hoods**
- 9 adjustable power levels + Booster
- Pause Function
- Timer function for each area
- **Total power 7.2kW (limitable)**

IDB 6003 PRO BK
Cod.: **08063102** EAN: **8422248077675**

- **3 cooking areas:** 1 zone of Ø300mm, 1 zone of Ø230mm, 1 zone of Ø180mm.
- **5" TFT touch control**
- Temperature control functions Fast & Precise (40ºC-180ºC)
- **PRO connectivity for full control of the CATA PRO hoods**
- 9 adjustable power levels + Booster
- Pause Function
- Timer function for each area
- **Total power 7.1kW (limitable)**

GIGA 750 BK
Cod.: **08026001** EAN: **8422248054485**

- **6 cooking areas:** 6 zones of 237x189mm. 1 modular zone of Ø400mm, 3 modular zones of 237x378mm
- **Slider Touch Control for each area**
- It has **three temperature functions**
- 9 adjustable power levels + Booster
- Timer function for each area
- **Total power 11kW**

INDUCTION AND SURFACE COOKER HOOD

GIGA 600 BK
Cod.: **08026002** EAN: **8422248059190**

- **4 cooking areas:** 4 zones of 237x189mm. 1 modular zone of Ø400mm, 2 modular zones of 237x378mm
- **Slider Touch Control for each area**
- It has **three temperature functions**
- 9 adjustable power levels + Booster
- Timer function for each area
- **Total power 7.4kW**

GIGA 600 WH
Cod.: **08026003** EAN: **8422248059206**

- **4 cooking areas:** 4 zones of 237x189mm. 1 modular zone of Ø400mm, 2 modular zones of 237x378mm
- **Slider Touch Control for each area**
- It has **three temperature functions**
- 9 adjustable power levels + Booster
- Timer function for each area
- **Total power 7.4kW**

GIGA 600 SD
Cod.: **08026609** EAN: **8422248069014**

- **4 cooking areas:** 4 zones of 237x189mm. 1 modular zone of Ø400mm, 2 modular zones of 237x378mm
- **Slider Touch Control for each area**
- It has **three temperature functions**
- 9 adjustable power levels + Booster
- Timer function for each area
- **Total power 7.4kW**

AS 750
Cod.: **08000400** EAN: **8422248078283**

- **4 cooking areas:** 4 zones of 215x190mm. 2 modular zones of 215x380mm
- 9 adjustable power levels + Booster
- **Timer function for each area**
- **Total power (induction + extraction) 7.47kW**

IAS 770
Cod. : **08000403** EAN : **8422248102568**

- **4 cooking areas:** 4 zones of 190x190mm. 2 modular zones of 190x380mm
- 9 adjustable power levels + Booster
- **Timer function for each area**
- **Total power (induction + extraction) 7.33kW**

INSB 9012 BK
Cod.: **08024401** EAN: **8422248082037**

- **5 cooking areas:** 4 zones of 210x200mm, 1 zone of Ø300mm. 2 modular zones of 210x400mm
- **Slider Touch Control for each area**
- It has **three temperature functions**
- 9 adjustable power levels + Booster
- Pause Function
- Timer function for each area
- **Total power 9kW**

INSB 8021 BK
Cod.: **08081400** EAN: **8422248082020**

- **4 cooking areas:** 2 zones of 210x200mm, 1 zone of Ø300mm, 1 zone of Ø180mm. 1 modular zone of 210x400mm
- **Slider Touch Control for each area**
- It has **three temperature functions**
- 9 adjustable power levels + Booster
- Pause Function
- Timer function for each area
- **Total power 7.2kW**

INSB 6032 BK
Cod.: **08063400** EAN: **8422248093972**

AUTO

- **3 cooking areas:** 1 zone of Ø320/190mm, 1 zone of Ø210mm, 1 zone of Ø160mm
- **Slider Touch Control for each area**
- It has **three temperature functions**
- **AUTO connectivity for automatic control of the CATA AUTO hoods**
- 9 adjustable power levels + Booster
- Pause Function
- Timer function for each area
- **Total power 7.1kW**

INSB 6030 WH
Cod.: **08053000** EAN: **8422248108607**

NEW PRODUCT

AUTO

- **3 cooking areas:** 1 zone of Ø300/180mm, 1 zone of Ø210mm, 1 zone of Ø160mm
- **Slider Touch Control for each area**
- It has **three temperature functions**
- **AUTO connectivity for automatic control of the CATA AUTO hoods**
- 9 adjustable power levels + Booster
- Pause Function
- Timer function for each area
- **Total power 7.1kW (limitable)**

INSB 6028 BK
Cod.: **08063500** EAN: **8422248108577**

NEW PRODUCT

AUTO

- **3 cooking areas:** 1 zone of Ø280/180mm, 1 zone of Ø210mm, 1 zone of Ø160mm
- **Slider Touch Control for each area**
- It has **three temperature functions**
- **AUTO connectivity for automatic control of the CATA AUTO hoods**
- 9 adjustable power levels + Booster
- Pause Function
- Timer function for each area
- **Total power 7.1kW (limitable)**

INSB 6003 BK
Cod.: **08063103** EAN: **8422248079518**

- **3 cooking areas:** 1 zone of Ø300mm, 1 zone of Ø230mm, 1 zone of Ø180mm
- **Slider Touch Control for each area**
- It has **three temperature functions**
- 9 adjustable power levels + Booster
- Pause Function
- Timer function for each area
- **Total power 7.1kW**

INSB 6003 WH
Cod.: **08053001** EAN: **8422248108614**

NEW PRODUCT

- **3 cooking areas:** 1 zone of Ø300mm, 1 zone of Ø230mm, 1 zone of Ø180mm
- **Slider Touch Control for each area**
- It has **three temperature functions**
- 9 adjustable power levels + Booster
- Pause Function
- Timer function for each area
- **Total power 7.1kW**

ISB 6130 BK
Cod.: **08073411** EAN: **8422248084215**

- **3 cooking areas:** 1 zone of Ø270mm, 1 zone of Ø220mm, 1 zone of Ø180mm
- **Hidden Slider Touch Control with acoustic warning**
- Keep warm function
- 9 adjustable power levels + Booster
- Pause function
- Timer function for each area
- **Total power 6.7kW**

ISB 603 BK
Cod.: **08073211** EAN: **8422248055871**

- **3 cooking areas:** 1 zone of Ø270mm, 1 zone of Ø220mm, 1 zone of Ø180mm
- **Slider Touch Control with acoustic warning**
- 9 adjustable power levels + Booster
- Timer function for each area
- **Total power 6.7kW**

IB 6303 BK
Cod.: **08063101** EAN: **8422248077668**

- **3 cooking areas:** 1 zone of Ø280mm, 1 zone of Ø210mm, 1 zone of Ø160mm
- **Touch Control with acoustic warning**
- 9 adjustable power levels + Booster
- Timer function for each area
- **Total power 7.1kW**

IB 6304 BK
Cod.: **08040102** EAN: **8422248077644**

- **4 cooking areas:** 1 zone of Ø210mm, 1 zone of Ø180mm, 2 zones of Ø160mm
- **Touch Control with acoustic warning**
- 9 adjustable power levels + Booster
- Timer function for each area
- **Total power 7kW**

IB 753 BK
Cod.: **08081202** EAN: **8422248054478**

- **3 cooking areas:** 1 zone of Ø270mm, 1 zone of Ø220mm,1 zone of Ø180mm
- **Touch Control with acoustic warning**
- 9 adjustable power levels + Booster
- Timer function for each area
- **Total power 6.7kW**

IB 073 BK
Cod.: **08081100** EAN: **8422248075473**

- **3 cooking areas:** 1 zone of Ø270mm, 1 zone of Ø220mm,1 zone of Ø180mm
- **Slider Touch Control with acoustic warning**
- 9 adjustable power levels + Booster
- Timer function for each area
- **Total power 6.7kW**

IB 772
Cod.: **08027205** EAN: **8422248060189**

- **2 cooking areas:** 1 zone of Ø270mm, 1 zone of Ø200mm
- **Slider Touch Control with acoustic warning**
- 9 adjustable power levels + Booster
- Timer function for each area
- **Total power 6kW**

IB 0772 BK
Cod.: **08027100** EAN: **8422248075480**

- **2 cooking areas:** 1 zone of Ø270mm, 1 zone of Ø200mm
- **Slider Touch Control with acoustic warning**
- 9 adjustable power levels + Booster
- Timer function for each area
- **Total power 6kW**

IB 1822 BK
Cod.: **08027132** EAN: **8422248088176**

- **2 cooking areas:** 2 zone of Ø220mm
- **Independent Touch Control for each area**
- 9 adjustable power levels + Booster
- Timer function for each area
- **Total power 3.6kW**

IB 2 PLUS BK
Cod.: **08027203** EAN: **8422248055864**

- **2 cooking areas:** 1 zone of Ø220mm, 1 zone of Ø180mm
- **Touch Control with acoustic warning**
- 9 adjustable power levels + Booster
- Timer function for each area
- **Total power 3.7kW**

ISB 3102 BK
Cod.: **08003401** EAN: **8422248102469**

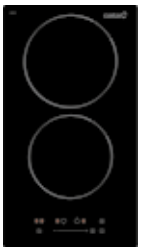

- **2 cooking areas:** 1 zone of Ø200mm, 1 zone of Ø180mm
- **Slider Touch Control with acoustic warning**
- 9 adjustable power levels + Booster
- Timer function for each area
- **Total power 3.5kW**

I 3002 HVI BK
Cod.: **08003402** EAN: **8422248104975**

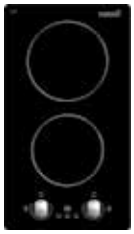

- **2 cooking areas:** 1 zone of Ø180mm, 1 zone of Ø160mm
- **Touch Control and Mechanical with acoustic warning**
- 9 adjustable power levels + Booster
- Timer function for each area
- **Total power 3.5kW**

MIXED HIGH LIGHT+INDUCTION

IT 773
Cod.: **08062205** EAN: **8422248060196**

- **3 cooking areas:** 1 triple zone of ø270/210/145mm, 1 zone of Ø220mm, 1 zone of Ø180mm
- **Slider Touch Control with acoustic warning**
- 9 adjustable power levels + Booster
- Timer function for each area
- Countdown alarm
- **Total power 6.4kW**

IT 7002 BK
Cod.: **08079202** EAN: **8422248073592**

- **2 cooking areas:** 1 double zone of ø270/210mm, 1 zone of Ø220mm
- **Slider Touch Control with acoustic warning**
- 9 adjustable power levels + Booster
- Timer function for each area
- Countdown alarm
- **Total power 5.4kW**

HIGH LIGHT HOBS

TN 604
Cod.: **08040010** EAN: **8422248058285**

- **4 cooking areas:** 2 zone of Ø180mm, 2 zone of Ø140mm
- **Touch Control with acoustic warning**
- 9 adjustable power levels
- Safety Lock
- Residual heat indicator
- **Total power 6kW**

604 HVI
Cod.: **08072201** EAN: **8422248108522**

- **4 cooking areas:** 2 zone of Ø195mm, 2 zone of Ø160mm
- **Mechanical controls**
- 9 adjustable power levels
- Residual heat indicator
- **Total power 6kW**

TT 603
Cod.: **08063107** EAN: **8422248082525**

- **3 cooking areas:** 1 triple zone of ø280/220/155mm, 1 zone of Ø185mm, 1 zone of Ø150mm
- **Touch Control with acoustic warning**
- 9 adjustable power levels
- Safety lock
- Residual heat indicator
- **Total power 5.7kW**

TD 6003 BK
Cod.: **08063403** EAN: **8422248094207**

- **3 cooking areas:** 1 zone of ø270/210mm, 1 zone of Ø180mm, 1 zone of Ø140mm
- **Touch Control with acoustic warning**
- 9 adjustable power levels
- Safety lock
- Residual heat indicator
- **Total power 5.4kW**

TT 5003
Cod.: **08077000** EAN: **8422248074162**

- **3 High Light cooking areas:** 1 zone of ø270/210/140mm, 1 zone of Ø180mm, 1 zone of Ø140mm
- **Touch Control with acoustic warning**
- 9 adjustable power levels
- Safety lock
- Residual heat indicator
- **Total power 5.7kW**

TD 3002 BK
Cod.: **08060403** EAN: **8422248108539**

- **2 cooking areas:** 1 zone of Ø190/120mm, 1 zone of Ø155mm
- **Touch Control with acoustic warning**
- 9 adjustable power levels
- Safety lock
- Residual heat indicator
- **Total power 3,2 kW**

VI 302
Cod.: **08049006** EAN: **8422248108515**

- **2 cooking areas:** 1 zone of Ø195mm, 1 zone of Ø160mm
- **Mechanical control**
- 9 adjustable power levels
- Residual heat indicator
- **Total power 3kW**

GAS-ON-GLASS HOBS

LCI 9041 BK
Cod.: **08005404** EAN: **8422248081924**

- **5 gas burners:**
- Rear Left: 1 semi-fast of 1.75kW
- Front Left: 1 semi-fast of 1.75kW
- Center: **1 triple ring** of 3.5kW
- Rear Right: 1 fast of 3kW
- Front Right: 1 auxiliaty of 1kW
- One hand automatic ignition
- Flame failure gas cut off safety system
- **Cast iron Grids/burners**
- Suitable for city gas
- LPG nozzles included in the box
- **Total Power 11KW**

L-7005 CI
Cod.: **08046410** EAN: **8422248081962**

- **5 gas burners:**
- Rear Left: 1 auxiliaty of 1kW
- Front Left: 1 semi-fast of 1.75kW
- Center: **1 triple ring** of 3.5kW
- Rear Right: 1 fast of 3kW
- Front Right: 1 semi-fast of 1,75kW
- One hand automatic ignition
- Flame failure gas cut off safety system
- **Cast iron Grids/burners**
- Suitable for city gas
- LPG nozzles included in the box
- **Total Power 11KW**

cata green innovation

LCI 6031 WH
Cod.: **08041100** EAN: **8422248072557**

- **4 gas burners:**
- Rear: 1 fast of 3kW
- Front: 1 semi-fast of 1.75kW
- Right: **1 triple ring** of 3.5kW
- Left: 1 auxiliaty of 1kW
- One hand automatic ignition
- Flame failure gas cut off safety system
- **Cast iron Grids/burners**
- Suitable for city gas
- LPG nozzles included in the box
- **Total Power 9,25KW**

LCI 6031 BK
Cod.: **08041500** EAN: **8422248072724**

- **4 gas burners:**
- Rear: 1 fast of 3kW
- Front: 1 semi-fast of 1.75kW
- Right: **1 triple ring** of 3.5kW
- Left: 1 auxiliaty of 1kW
- One hand automatic ignition
- Flame failure gas cut off safety system
- **Cast iron Grids/burners**
- Suitable for city gas
- LPG nozzles included in the box
- **Total Power 9,25KW**

LCIB 6031 BK
Cod.: **08041503** EAN: **8422248078788**

- **4 gas burners:**
- Rear: 1 fast of 3kW
- Front: 1 semi-fast of 1.75kW
- Right: **1 triple ring** of 3.5kW
- Left: 1 auxiliaty of 1kW
- One hand automatic ignition
- Flame failure gas cut off safety system
- **Cast iron Grids/burners**
- Exclusive Use for LPG Gas
- **Total Power 9,25KW**

CCI 6031 BK
Cod.: **08041501** EAN: **8422248073691**

- **4 gas burners:**
- Rear Left: 1 semi-fast of 1.75kW
- Front Left: **1 triple ring** of 3.5kW
- Rear Right: 1 semi-fast of 1.75kW
- Front Right: 1 auxiliaty of 1kW
- One hand automatic ignition
- Flame failure gas cut off safety system
- **Cast iron Grids/burners**
- Suitable for city gas
- LPG nozzles included in the box
- **Total power 8kW**

CI 631 BK
Cod.: **08041412** EAN: **8422248058681**

- **4 gas burners:**
- Rear Left: 1 semi-fast of 1.75kW
- Front Left: **1 triple ring** of 3.5kW
- Rear Right: 1 semi-fast of 1.75kW
- Front Right: 1 auxiliaty of 1kW
- One hand automatic ignition
- Flame failure gas cut off safety system
- **Enamelled Grids/burners**
- Suitable for city gas
- LPG nozzles included in the box
- **Total power 8kW**

CIB 6031 BK
Cod.: **08068400** EAN: **8422248068352**

- **4 gas burners:**
- Rear Left: 1 semi-fast of 1.75kW
- Front Left: **1 triple ring** of 3.5kW
- Rear Right: 1 semi-fast of 1.75kW
- Front Right: 1 auxiliaty of 1kW
- One hand automatic ignition
- Flame failure gas cut off safety system
- **Enamelled Grids/burners**
- Exclusive Use for LPG Gas
- **Total power 8kW**

LCI 6021 BK
Cod.: **08068401** EAN: **8422248068376**

- **3 gas burners:**
- Rear Right: 1 semi-fast of 1.75kW
- Front Right: 1 auxiliaty of 1kW
- Left: **1 triple ring** of 3.5kW
- One hand automatic ignition
- Flame failure gas cut off safety system
- **Cast iron Grids/burners**
- Suitable for city gas
- LPG nozzles included in the box
- **Total power 6.25kW**

LCIB 6021 BK
Cod.: **08068403** EAN: **8422248078795**

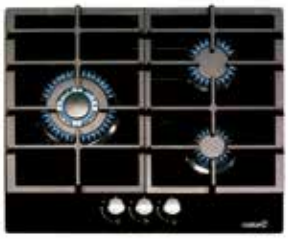

- **3 gas burners:**
- Rear Right: 1 semi-fast of 1.75kW
- Front Right: 1 auxiliaty of 1kW
- Left: **1 triple ring** of 3.5kW
- One hand automatic ignition
- Flame failure gas cut off safety system
- **Cast iron Grids/burners**
- Exclusive Use for LPG Gas
- **Total power 6.25kW**

SCI 6021 BK
Cod.: **08068405** EAN: **8422248086929**

- **3 gas burners:**
- Rear Right: 1 semi-fast of 1.75kW
- Front Right: 1 auxiliaty of 1kW
- Left: **1 triple ring** of 3.5kW
- One hand automatic ignition
- Flame failure gas cut off safety system
- **Cast iron Grids/burners**
- Suitable for city gas
- LPG nozzles included in the box
- **Total power 6.25kW**

CCI 6021 BK
Cod.: **08068501** EAN: **8422248073707**

- **3 gas burners:**
- Rear Right: 1 semi-fast of 1.75kW
- Front Right: 1 auxiliaty of 1kW
- Left: **1 triple ring** of 3.5kW
- One hand automatic ignition
- Flame failure gas cut off safety system
- **Cast iron Grids/burners**
- Suitable for city gas
- LPG nozzles included in the box
- **Total power 6.25kW**

CI 6021 BK
Cod.: **08068309** EAN: **8422248067355**

- **3 gas burners:**
- Rear Right: 1 semi-fast of 1.75kW
- Front Right: 1 auxiliaty of 1kW
- Left: **1 triple ring** of 3.5kW
- One hand automatic ignition
- Flame failure gas cut off safety system
- **Enamelled Grids/burners**
- Suitable for city gas
- LPG nozzles included in the box
- **Total power 6.25kW**

CIB 6021 BK
Cod.: **08068402** EAN: **8422248073677**

- **3 gas burners:**
- Rear Right: 1 semi-fast of 1.75kW
- Front Right: 1 auxiliaty of 1kW
- Left: **1 triple ring** of 3.5kW
- One hand automatic ignition
- Flame failure gas cut off safety system
- **Enamelled Grids/burners**
- Exclusive Use for LPG Gas
- **Total power 6.25kW**

RUSTIC GAS-ON-GLASS HOB

STAINLESS STEEL GAS HOBS

CCI 5003 BK
Cod.: **08041505** EAN: **8422248094269**

- **3 gas burners:**
- Rear Right: 1 semi-fast of 1.75kW
- Front Right: 1 auxiliaty of 1kW
- Left: **1 triple ring** of 3.5kW
- One hand automatic ignition
- Flame failure gas cut off safety system
- **Cast iron Grids/burners**
- Suitable for city gas
- LPG nozzles included in the box
- **Total power 6.25kW**

SCI 3002 BK
Cod.: **08047410** EAN: **8422248093743**

- **2 gas burners:**
- Rear: 1 fast of 3kW
- Front: 1 auxiliaty of 1kW
- One hand automatic ignition
- Flame failure gas cut off safety system
- **Cast iron Grids/burners**
- Suitable for city gas
- LPG nozzles included in the box
- **Total Power 4kW**

RCI 631 BK
Cod.: **08028403** EAN: **8422248055024**

- **4 gas burners:**
- Rear Left: **1 triple ring** of 3.5kW
- Front Left: 1 semi-fast of 1.75kW
- Rear Right: 1 semi-fast of 1.75kW
- Front Right: 1 auxiliaty of 1kW
- One hand automatic ignition
- Flame failure gas cut off safety system
- **Cast iron Grids/burners**
- Suitable for city gas
- LPG nozzles included in the box
- **Total power 8kW**

LGI 9041 X
Cod.: **08005350** EAN: **8422248081948**

- **5 gas burners:**
- Rear Left: 1 fast of 3kW
- Front Left: 1 semi-fast of 1.75kW
- Center: **1 triple ring** of 3.5kW
- Rear Right: 1 semi-fast of 1.75kW
- Front Right: 1 auxiliaty of 1kW
- One hand automatic ignition
- Flame failure gas cut off safety system
- **Cast iron Grids/burners**
- Suitable for city gas
- LPG nozzles included in the box
- **Total Power 11KW**

GAS INOX

LGI 7041 X
Cod.: **08045305** EAN: **8422248108812**

- **5 gas burners:**
- Rear Left: 1 Semi-fast 1.75 kW
- Front Left: 1 auxiliaty 1 kW
- Centre: **1 triple ring**, 3.5kW
- Rear Right: 1 fast 3 kW
- Front Right: 1 semi-fast, 1.75kW
- One hand automatic ignition
- Flame failure gas cut off safety system
- **Cast iron Grids/burners**
- Suitable for city gas
- LPG nozzles included in the box
- **Total Power 11KW**

LGD 631 X
Cod.: **08066002** EAN: **8422248058735**

- **4 gas burners:**
- Rear: 1 semi-fast, 1.75kW
- Front: 1 auxiliaty, 1kW
- Right: **1 triple ring**, 3.5kW
- Left: 1 fast, 3kW
- One hand automatic ignition
- Flame failure gas cut off safety system
- **Cast Iron Grids/burners**
- Suitable for city gas
- LPG nozzles included in the box
- **Total Power 9.25kW**

GI 6031 X — 190 €
Cod.: **08066011** EAN: **8422248067331**

- **4 gas burners:**
- Rear Left: 1 semi-fast, 1.75kW
- Front Left: **1 triple ring** of 3.5kW
- Rear Right: 1 semi-fast, 1.75kW
- Front Right: 1 auxiliaty, 1kW
- One hand automatic ignition
- Flame failure gas cut off safety system
- **Enamelled Grids/burners**
- Suitable for city gas
- LPG nozzles included in the box
- **Total power 8kW**

GI 6004 X
Cod.: **08066600** EAN: **8422248067775**

- **4 gas burners:**
- Rear Left: 1 semi-fast, 1.75kW
- Front Left: 1 fast, 3kW
- Rear Right: 1 semi-fast, 1.75kW
- Front Right: 1 auxiliaty, 1kW
- One hand automatic ignition
- Flame failure gas cut off safety system
- **Enamelled Grids/burners**
- Suitable for city gas
- LPG nozzles included in the box
- **Total power 7.5kW**

GIB 6004 X
Cod.: **08066312** EAN: **8422248068369**

- **4 gas burners:**
- Rear Left: 1 semi-fast, 1.75kW
- Front Left: 1 fast, 3kW
- Rear Right: 1 semi-fast, 1.75kW
- Front Right: 1 auxiliaty, 1kW
- One hand automatic ignition
- Flame failure gas cut off safety system
- **Enamelled Grids/burners**
- Exclusive Use for LPG Gas
- **Total power 7.5kW**

GI 6021 X
Cod.: **08068308** EAN: **8422248067348**

- **3 gas burners:**
- Left: 1 triple ring, 3.5kW
- Rear: 1 semi-fast, 1.75kW
- Front: 1 auxiliaty, 1kW
- One hand automatic ignition
- Flame failure gas cut off safety system
- **Enamelled Grids/burners**
- Suitable for city gas
- LPG nozzles included in the box
- **Total power 6.25kW**

GIB 6021 X
Cod.: **08068310** EAN: **8422248073684**

- **3 gas burners:**
- Left: 1 triple ring, 3.5kW
- Rear: 1 semi-fast, 1.75kW
- Front: 1 auxiliaty, 1kW
- One hand automatic ignition
- Flame failure gas cut off safety system
- **Enamelled Grids/burners**
- Exclusive Use for LPG Gas
- **Total power 6.25kW**

GI 3002 X
Cod.: **08039600** EAN: **8422248108829**

- **2 gas burners**:
- Rear: 1 fast of 3kW
- Front: 1 auxiliaty of 1kW
- One hand automatic ignition
- Flame failure gas cut off safety system
- **Enameled Grids/burners**
- Suitable for city gas
- LPG nozzles included in the box
- **Total Power 4kW**

KITCHENWARE

SET NEW YORK — 120 €
Cod.: **03000005** EAN: **8422248080583**

- Stainless Steel Collection 5 piece set.
- Stainless Steel Handles welded to the pan, that provides a longe life and better resistance.
- High Resitant glass lids.
- Straight lines, elegant and practical design for easy cleaning.
- Suitable for all types on hobs, gas, electric, vitroceramic and induction.
- Suitable for cleaning in the dishwasher machine.

SET PROFESSIONAL — 105 €
Cod.: **03000006** EAN: **8422248085885**

- Stainless Steel Collection 4 piece set.
- Stainless Steel Handles welded to the pan, that provides a longe life and better resistance.
- High Resitant glass lids.
- Straight lines, elegant and practical design for easy cleaning.
- Suitable for all types on hobs, gas, electric, vitroceramic and induction.
- Suitable for cleaning in the dishwasher machine.

PARRILLA BARBACOA — 65 €
Cod.: **03017400** EAN: **8422248082563**

- Suitable for induction.
- Enamelled Cast Iron. Grill.
- Nonstick surface
- Ideal for: searing meat and fish with minimum of fat. Grilling vegetables and fruit.
- Good heat retention and temperature stability.
- Robust and durable.
- Easy to clean

BUILT-IN DISHWASHERS

LVI 61014 — 569 €
Cod.: **07200005** EAN: **8422248096812**

- **14 place settings**
- **Energy class E** drying and cleaning A
- **3rd layer cutlery basket**
- 49 dB(A) noise level
- 5 programs: Intensive, normal, ECO, Express 90', Quick 30'
- Functions: Program delay 3/6/9 h, half load, extradry.

LVI 46010 — 549 €
Cod.: **07200006** EAN: **8422248096829**

- **10 place settings**
- **Energy class E** drying and cleaning A
- **3rd layer cutlery basket**
- 49 dB(A) noise level
- 4 programs: Auto, ECO, Glass, Quick 30'
- Functions: Program delay 3/6/9 h, half load, extradry.

LVI 61013 — 519 €
Cod.: **07200007** EAN: **8422248096836**

- **13 place settings**
- **Energy class E** drying and cleaning A
- 49 dB(A) noise level
- 5 programs: Intensive, normal, ECO, Express 90', Quick 30'
- Functions: Program delay 3/6/9 h, half load, extradry., stop/pause

LVI 46009 — 489 €
Cod.: **07200008** EAN: **8422248096843**

- **10 place settings**
- **Energy class E** drying and cleaning A
- 49 dB(A) noise level
- 5 programs: Intensive, normal, ECO, Express 90', Quick 30'
- Functions: Program delay 3/6/9 h, half load, extradry.

BUILT-IN WASHING MACHINE

LI 08014 — 759 €
Cod.: **07900002** EAN: **8422248096942**

- **8 Kgs capacity**
- **1400 rpm**
- **Energy class B**
- Washing programs: 16
- Display, program delay 24h, duration and remaining time
- Foam reduction automatic system
- Self balanced load
- Children safety lock

BUILT-IN REFRIGERATORS

CI-54177 ST — 649 €
Cod.: **07800010** EAN: **8422248106566**

- 1,77m built in combi fridge
- **Energy efficiency F**
- Refrigerator: 1 vegetable drawer, 3 balconies in door and 4 glass shelves
- Freezer: 3 large capacity drawers
- Super freeze function
- Net capacity (l): 249 (179+70)
- Electric consumption : 271 kW/year
- **LED lighting**
- Sliding door system
- Reversible doors

CI-54177 NF — 879 €
Cod.: **07850003** EAN: **8422248102131**

- Combined Total no Frost 1,77 m
- **Energy efficiency F**
- **No Frost in Freezer & Fridge**
- Refrigerator: 1 vegetable drawer, 3 balconies in door and 5 glass shelves
- Freezer: 3 large capacity drawers
- **Metallic interior finishes**
- Net capacity 241 (177+64)
- Electric consumption: 288 Kw/año
- **Led Lighting**
- Sliding door system
- Reversible doors

BUILT-IN WINE COOLERS

VI 15107 X — **499 €**
Cod.: **07751006** EAN: **8422248101790**

- **No frost built-in wine cooler**
- Capacity **7 bottles**
- Temperature between 5/20ºC.
- **Electronic temperature control**
- **Inner led light**
- Reversible door
- Energy class G
- Sound level 41 dB

VI 30117 X — **599 €**
Cod.: **07751007** EAN: **8422248101806**

- **No frost built-in wine cooler**
- Capacity **17 bottles**
- **Dual Temperature zone between 5/22ºC**
  5/13º for white without oak-aging period, sweet, rosé and champagne
  13/22º for white with oak-aging, red
- **Electronic temperature control**
- **Inner led light**
- Reversible door
- Energy class G
- Sound level 41dB

VI 54024 X — **699 €**
Cod.: **07751008** EAN: **8422248101837**

- **No frost built-in wine cooler**
- Capacity **28 bottles**
- Temperature between 5/20ºC.
- 2 wooden shelves
- **Electronic temperature control**
- **Inner led light**
- Reversible door
- Energy class G
- Sound level 40 dB

VI 59082 X — **899 €**
Cod.: **07702004** EAN: **8422248098915**

- **No frost built-in wine cooler**
- Capacity **46 bottles**
- **Dual Temperature zone between 5/22ºC**
  5/13º for white without oak-aging period, sweet, rosé and champagne
  13/22º for white with oak-aging, red
- 5 wooden shelves
- **Electronic temperature control**
- **Inner led light**
- Reversible door
- Energy class G
- Sound level 41dB

UNDERMOUNT SINKS

CB 50-40 R10
Cod.: **02625006** EAN: **8422248108652**

- **Square bowl**
- Installation in 60-cm unit
- **Bowl depth 20cm**
- Stainless steel AISI 304 18/10
- Basket valve 3 1/2"
- Thickness 1,2mm

CB 45-40 R10
Cod.: **02621006** EAN: **8422248108645**

- **Square bowl**
- Installation in 60-cm unit
- **Bowl depth 20cm**
- Stainless steel AISI 304 18/10
- Basket valve 3 1/2"
- Thickness 1,2mm

CB 40-40 P R10
Cod.: **02624006** EAN: **8422248108669**

- **Square bowl**
- Installation in 50-cm unit
- **Bowl depth 25cm**
- Stainless steel AISI 304 18/10
- Basket valve 3 1/2"
- Thickness 1,2mm

CB 40-40 R10
Cod.: **02624016** EAN: **8422248108638**

- **Square bowl**
- Installation in 50-cm unit
- **Bowl depth 20cm**
- Stainless steel AISI 304 18/10
- Basket valve 3 1/2"
- Thickness 1,2mm

CB-2
Cod.: **02607101** EAN: **8422248074681**

- **Double square bowl**
- Installation in 90-cm unit
- **Bowl depth 20cm**
- Stainless steel AISI 304 18/8
- Basket valve 3 1/2"
- Thickness 0,9mm

CB 50-40
Cod.: **02625300** EAN: **8422248048743**

- **Square bowl**
- Installation in 60-cm unit
- **Bowl depth 20cm**
- Stainless steel AISI 304 18/8
- Basket valve 3 1/2"
- Thickness 0,8mm

CB 45-40
Cod.: **02621009** EAN: **8422248043175**

- **Square bowl**
- Installation in 60-cm unit
- **Bowl depth 18cm**
- Stainless steel AISI 304 18/8
- Basket valve 3 1/2"
- Thickness 0,8mm

CB 40-40
Cod.: **02624007** EAN: **8422248109000**

- **Square bowl**
- Installation in 50-cm unit
- **Bowl depth 18cm**
- Stainless steel AISI 304
- Basket valve 3 1/2"
- Thickness 0,7mm

TOP MOUNT SINKS

CBP 40-40
Cod.: **02624302** EAN: **8422248109017**

- **Square bowl**
- Installation in 50-cm unit
- **Bowl depth 20cm**
- Stainless steel AISI 304
- Basket valve 3 1/2"
- Thickness 0,7mm

CBS-1 40-40 D R10
Cod.: **02624008** EAN: **8422248109024**

- **1 square bowl with draining board**
- Installation in 45-cm unit
- **Bowl depth 20cm**
- Stainless steel AISI 304
- Basket valve 3 1/2"
- Thickness 1,2mm

CBS-2 40-40 R10
Cod.: **02624009** EAN: **8422248109031**

- **Double square bowl**
- Installation in 90-cm unit
- **Bowl depth 20cm**
- Stainless steel AISI 304
- Basket valve 3 1/2"
- Thickness 1,2mm

CBS-1 54-40 R10
Cod.: **02624010** EAN: **8422248109048**

- **Square bowl**
- Installation in 60-cm unit
- **Bowl depth 20cm**
- Stainless steel AISI 304
- Basket valve 3 1/2"
- Thickness 1,2mm

CDL-1 EI
Cod.: **02606601** EAN: **8422248108911**

- **1 square bowl with draining board**
- Installation in 45-cm unit
- **Bowl depth 18cm**
- Stainless steel AISI 304 18/8
- Basket valve 3 1/2"
- Thickness 0,8mm

CDL-1 ED
Cod.: **02606602** EAN: **8422248108928**

- **1 square bowl with draining board**
- Installation in 45-cm unit
- **Bowl depth 18cm**
- Stainless steel AISI 304 18/8
- Basket valve 3 1/2"
- Thickness 0,8mm

CDP-1 EI
Cod.: **02606501** EAN: **8422248108942**

- **1 square bowl with draining board**
- Installation in 45-cm unit
- **Bowl depth 18cm**
- Stainless steel AISI 304 18/10
- Basket valve 3 1/2"
- Thickness 0,8mm

CDP-1 ED
Cod.: **02606502** EAN: **8422248108959**

- **1 square bowl with draining board**
- Installation in 45-cm unit
- **Bowl depth 18cm**
- Stainless steel AISI 304 18/10
- Basket valve 3 1/2"
- Thickness 0,8mm

RD-1 EI
Cod.: **02603302** EAN: **8422248109109**

- 1 round bowl with draining board
- Installation in 45cm unit
- Bowl depth 15cm
- Stainless steel AISI 304 18/8
- Basket valve 3 1/2"
- Thickness 0,8mm

RD-1 ED
Cod.: **02603303** EAN: **8422248109123**

- 1 round bowl with draining board
- Installation in 45cm unit
- Bowl depth 15cm
- Stainless steel AISI 304 18/8
- Basket valve 3 1/2"
- Thickness 0,8mm

CDS-1 EI
Cod.: **02606401** EAN: **8422248108973**

- 1 square bowl with draining board
- Installation in 45-cm unit
- Bowl depth 15cm
- Stainless steel AISI 304 18/10
- Basket valve 3 1/2"
- Thickness 0,5mm

CDS-1 ED
Cod.: **02606402** EAN: **8422248108980**

- 1 square bowl with draining board
- Installation in 45-cm unit
- Bowl depth 15cm
- Stainless steel AISI 304 18/10
- Basket valve 3 1/2"
- Thickness 0,5mm

C-2 AG
Cod.: **02607102** EAN: **8422248109055**

- **2 square bowl**
- Installation in 80-cm unit
- **Bowl depth 20cm**
- Stainless steel AISI 304 18/8
- Basket valve 3 1/2"
- Thickness 0,7mm

R-2 AG
Cod.: **02604209** EAN: **8422248043151**

- **2 round bowl**
- Installation in 90-cm unit
- **Bowl depth 18cm**
- Stainless steel AISI 304 18/8
- Basket valve 3 1/2"
- Thickness 0,8mm

CSS60-1
Cod.: **02612300** EAN: **8422248074377**

- **Square bowl**
- Installation in 60-cm unit
- **Bowl depth 15cm**
- Stainless steel AISI 304 18/8
- Basket valve 3 1/2"
- Thickness 0,7mm

CSS-1
Cod.: **02612400** EAN: **8422248074384**

- **Square bowl**
- Installation in 50-cm unit
- **Bowl depth 15cm**
- Stainless steel AISI 304 18/8
- Basket valve 3 1/2"
- Thickness 0,7mm

cata green innovation

RS-1
Cod.: **02602100** EAN: **8422248108997**

- **Square bowl**
- Installation in 45-cm unit
- **Bowl depth 16,5cm**
- Stainless steel AISI 304 18/8
- Basket valve 3 1/2"
- Thickness 0,8mm

RS-1
Cod.: **02602100** EAN: **8422248108997**

- **Round bowl**
- Installation in 45-cm unit
- **Bowl depth 16cm**
- Stainless steel AISI 304 18/8
- Basket valve 3 1/2"
- Thickness 0,7mm

TAPS

CPA
Cod.: **02507400** EAN: **8422248107938**

- Brass tap
- **Ceramic cartridge**
- **Cold start**
- Removable stem
- Revolving stem 360º
- **Anti scale areator with 6l/min flow limit**

CPB
Cod.: **02506400** EAN: **8422248107914**

- Brass tap
- **Ceramic cartridge**
- **Cold start**
- Removable stem
- Revolving stem 360º
- **Anti scale areator with 6l/min flow limit**

XPB
Cod.: **02506300** EAN: **8422248107921**

- Stainless Steel tap
- **Ceramic cartridge**
- **Cold start**
- Removable stem
- Revolving stem 360º
- **Anti scale areator with 6l/min flow limit**

XSE
Cod.: **02500301** EAN: **8422248107907**

- Stainless Steel tap
- **Ceramic cartridge**
- **Cold start**
- Removable stem
- Revolving stem 360º
- **Anti scale areator with 6l/min flow limit**

CSE
Cod.: **02500401** EAN: **8422248107891**

- Brass tap
- **Ceramic cartridge**
- **Cold start**
- Removable stem
- Revolving stem 360º
- **Anti scale areator with 6l/min flow limit**

CSA
Cod.: **02500400** EAN: **8422248107884**

- Brass tap
- **Ceramic cartridge**
- **Cold start**
- Revolving stem 360º
- **Anti scale areator with 6l/min flow limit**
- Chrome finish

CMA
Cod.: **02503400** EAN: **8422248107877**

- Brass tap
- **Ceramic cartridge**
- **Cold start**
- Revolving stem 360º
- **Anti scale areator with 6l/min flow limit**
- Chrome finish

CBA
Cod.: **02502400** EAN: **8422248107860**

- Brass tap
- **Ceramic cartridge**
- Revolving stem 360º
- **Anti scale areator with 6l/min flow limit**
- Chrome finish

CBB
Cod.: **02501400** EAN: **8422248107778**

- Brass tap
- **Ceramic cartridge**
- Revolving stem 360º
- **Anti scale areator with 6l/min flow limit**
- Chrome finish

E GLASS SERIES

E-100 GTH
Cod.: **00900200** EAN: **8422248049634**

- **Perimeter extraction** system
- Timer
- **Humidity detector**
- **Temperature and humidity display**
- **Minimum sound level of 17dB**
- Maximum Airflow 115 m3/h
- 220-240V 50/60Hz, class B
- Outlet diameter 100

E-120 GTH
Cod.: **00901200** EAN: **8422248056823**

- **Perimeter extraction** system
- Timer
- **Humidity detector**
- **Temperature and humidity display**
- **Minimum sound level of 19dB**
- Maximum Airflow 210 m3/h
- 220-240V 50/60Hz, class B
- Outlet diameter 120

E-150 GTH
Cod.: **00902200** EAN: **8422248056854**

- **Perimeter extraction** system
- Timer
- **Humidity detector**
- **Temperature and humidity display**
- **Minimum sound level of 23dB**
- Maximum Airflow 350 m3/h
- 220-240V 50/60Hz, class B
- Outlet diameter 150

E-100 GSTH
Cod.: **00900600** EAN: **8422248056076**

- **Perimeter extraction** system
- Timer
- **Humidity detector**
- **Temperature and humidity display**
- **Minimum sound level of 17dB**
- Maximum Airflow 115 m3/h
- 220-240V 50/60Hz, class B
- Outlet diameter 100

E GLASS SERIES

E-100 GTH BK
Cod.: **00900602** EAN: **8422248071895**

- **Perimeter extraction** system
- Timer
- **Humidity detector**
- **Temperature and humidity display**
- **Minimum sound level of 17dB**
- Maximum Airflow 115 m3/h
- 220-240V 50/60Hz, class B
- Outlet diameter 100

E-100 GT
Cod.: **00900100** EAN: **8422248049627**

- **Perimeter extraction** system
- Timer
- **Minimum sound level of 31dB**
- Maximum Airflow 115 m3/h
- 220-240V 50/60Hz, class B
- Outlet diameter 100

E-120 GT
Cod.: **00901100** EAN: **8422248056816**

- **Perimeter extraction** system
- Timer
- **Minimum sound level of 33dB**
- Maximum Airflow 210 m3/h
- 220-240V 50/60Hz, class B
- Outlet diameter 120

E-100 GST
Cod.: **00900500** EAN: **8422248056069**

- **Perimeter extraction** system
- Timer
- **Minimum sound level of 31dB**
- Maximum Airflow 115 m3/h
- 220-240V 50/60Hz, class B
- Outlet diameter 100

E GLASS SERIES

E-100 GT BK
Cod.: **00900502** EAN: **8422248071888**

- **Perimeter extraction** system
- Timer
- **Minimum sound level of 31dB**
- Maximum Airflow 115 m3/h
- 220-240V 50/60Hz, class B
- Outlet diameter 100

E-100 GLT
Cod.: **00900001** EAN: **8422248056786**

- **Perimeter extraction** system
- Timer
- **Ambient light**
- **Minimum sound level of 31dB**
- Maximum Airflow 115 m3/h
- 220-240V 50/60Hz, class B
- Outlet diameter 100

E-100 G
Cod.: **00900000** EAN: **8422248049610**

- **Perimeter extraction** system
- Minimum sound level of 31dB
- **Maximum Airflow 115 m3/h**
- 220-240V 50/60Hz, class B
- Outlet diameter 100

E-100 GS
Cod.: **00900400** EAN: **8422248056052**

- **Perimeter extraction system**
- Minimum sound level of 31dB
- **Maximum Airflow 115 m3/h**
- 220-240V 50/60Hz, class B
- Outlet diameter 100

E GLASS SERIES

E-100 G BK
Cod.: **00900402** EAN: **8422248071871**

- **Perimeter extraction** system
- **Minimum sound level of 31dB**
- Maximum Airflow 115 m3/h
- 220-240V 50/60Hz, class B
- Outlet diameter 100

E-120 G
Cod.: **00901000** EAN: **8422248056809**

- **Perimeter extraction** system
- **Minimum sound level of 33dB**
- Maximum Airflow 210 m3/h
- 220-240V 50/60Hz, class B
- Outlet diameter 120

E-150 G
Cod.: **00902000** EAN: **8422248056830**

- **Perimeter extraction** system
- **Minimum sound level of 35dB**
- Maximum Airflow 350 m3/h
- 220-240V 50/60Hz, class B
- Outlet diameter 150

U-COMFORT SERIES

UC-10 HYGRO
Cod.: **01200200** EAN: **8422248079860**

- **Different Frontal cover designs**
- **Activated by presence**
- Timer
- **Humidity detector**
- Temperature and humidity display
- **Minimum sound level of 26 dB**
- Maximum Airflow 110 m3/h
- 220-240V 50/60Hz, class B
- Outlet diameter 100

UC-10 HYGRO SILVER
Cod.: **01201200** EAN: **8422248082594**

- **Different Frontal cover designs**
- **Activated by presence**
- Timer
- **Humidity detector**
- Temperature and humidity display
- **Minimum sound level of 26 dB**
- Maximum Airflow 110 m3/h
- 220-240V 50/60Hz, class B
- Outlet diameter 100

UC-10 HYGRO BLACK
Cod.: **01202200** EAN: **8422248082624**

- **Different Frontal cover designs**
- **Activated by presence**
- Timer
- **Humidity detector**
- Temperature and humidity display
- **Minimum sound level of 26 dB**
- Maximum Airflow 110 m3/h
- 220-240V 50/60Hz, class B
- Outlet diameter 100

UC-10 TIMER
Cod.: **01200100** EAN: **8422248079853**

- **Different Frontal cover designs**
- Timer
- **Minimum sound level of 26 dB**
- Maximum Airflow 110 m3/h
- 220-240V 50/60Hz, class B
- Outlet diameter 100

U-COMFORT SERIES

UC-10 TIMER SILVER
Cod.: **01201000** EAN: **8422248082587**

- **Different Frontal cover designs**
- Timer
- **Minimum sound level of 26 dB**
- Maximum Airflow 110 m3/h
- 220-240V 50/60Hz, class B
- Outlet diameter 100

UC-10 STD
Cod.: **01200000** EAN: **8422248079846**

- **Different Frontal cover designs**
- **Minimum sound level of 26 dB**
- Maximum Airflow 110 m3/h
- 220-240V 50/60Hz, class B
- Outlet diameter 100

X-MART MATIC SERIES

X-MART 10 MATIC T
Cod.: **01016000** EAN: **8422248003551**

- **Perimeter extraction** system
- Timer
- Pilot light operation
- Minimum sound level of 38dB
- Maximum Airflow 98 m3/h
- 220-240V 50/60Hz, class B
- Outlet diameter 100

X-MART 10 MATIC
Cod.: **01015000** EAN: **8422248003544**

- **Perimeter extraction** system
- Pilot light operation
- Minimum sound level of 38dB
- Maximum Airflow 98 m3/h
- 220-240V 50/60Hz, class B
- Outlet diameter 100

X-MART 12 MATIC
Cod.: **01025000** EAN: **8422248003575**

- **Perimeter extraction** system
- Pilot light operation
- Minimum sound level of 40dB
- Maximum Airflow 190 m3/h
- 220-240V 50/60Hz, class B
- Outlet diameter 120

X-MART 15 MATIC
Cod.: **01035000** EAN: **8422248003605**

- **Perimeter extraction** system
- Pilot light operation
- Minimum sound level of 42 dB
- Maximum Airflow 320 m3/h
- 220-240V 50/60Hz, class B
- Outlet diameter 150

X-MART MATIC SERIES

X-MART 10 MATIC INOX
Cod.: **01045000** EAN: **8422248003728**

- **Perimeter extraction** system
- Pilot light operation
- Minimum sound level of 38 dB
- Maximum Airflow 98 m3/h
- 220-240V 50/60Hz, class B
- Outlet diameter 150

B-MATIC SERIES

B-10 MATIC-TIMER
Cod.: **00916000** EAN: **8422248110303**

- **With automatic shutter**
- Timer
- Minimum sound level of 41 dB
- Maximum Airflow 98 m3/h
- 220-240V 50/60Hz, class B
- Outlet diameter 100

B-10 MATIC
Cod.: **00915000** EAN: **8422248110204**

- **With automatic shutter**
- Minimum sound level of 41 dB
- Maximum Airflow 98 m3/h
- 220-240V 50/60Hz, class B
- Outlet diameter 100

B-15 MATIC
Cod.: **00935000** EAN: **8422248111102**

- **With automatic shutter**
- Minimum sound level of 43dB
- Maximum Airflow 320 m3/h
- 220-240V 50/60Hz, class B
- Outlet diameter 150

X-MART SERIES

X-MART 10 INOX H
Cod.: **01044000** EAN: **8422248003650**

- **Perimeter extraction** system
- **Humidity detector**
- Pilot light operation
- Minimum sound level of 38dB
- Maximum Airflow 98 m3/h
- 220-240V 50/60Hz, class B
- Outlet diameter 100

X-MART 10 TIMER
Cod.: **01011000** EAN: **8422248003414**

- **Perimeter extraction** system
- Timer
- Pilot light operation
- Minimum sound level of 38dB
- Maximum Airflow 98 m3/h
- 220-240V 50/60Hz, class B
- Outlet diameter 100

X-MART 10 STD
Cod.: **01010000** EAN: **8422248003384**

- **Perimeter extraction** system
- Pilot light operation
- Minimum sound level of 38dB
- Maximum Airflow 98 m3/h
- 220-240V 50/60Hz, class B
- Outlet diameter 100

X-MART 12 STD
Cod.: **01020000** EAN: **8422248003391**

- **Perimeter extraction** system
- Pilot light operation
- Minimum sound level of 40 dB
- Maximum Airflow 190 m3/h
- 220-240V 50/60Hz, class B
- Outlet diameter 120

X-MART SERIES

X-MART 15 STD
Cod.: **01030000** EAN: **8422248003407**

- **Perimeter extraction** system
- Pilot light operation
- Minimum sound level of 42 dB
- Maximum Airflow 320 m3/h
- 220-240V 50/60Hz, class B
- Outlet diameter 150

X-MART 10 INOX
Cod.: **01040000** EAN: **8422248003636**

- **Perimeter extraction** system
- Pilot light operation
- Minimum sound level of 38 dB
- Maximum Airflow 98 m3/h
- 220-240V 50/60Hz, class B
- Outlet diameter 100

X-MART 12 INOX
Cod.: **01050000** EAN: **8422248003667**

- **Perimeter extraction** system
- Pilot light operation
- Minimum sound level of 40 dB
- Maximum Airflow 190 m3/h
- 220-240V 50/60Hz, class B
- Outlet diameter 120

X-MART 15 INOX
Cod.: **01060000** EAN: **8422248003698**

- **Perimeter extraction** system
- Pilot light operation
- Minimum sound level of 42 dB
- Maximum Airflow 320 m3/h
- 220-240V 50/60Hz, class B
- Outlet diameter 150

SILENTIS SERIES

SILENTIS LN 10 T
Cod.: **01073000** EAN: **8422248070379**

- **Front cover easy to dismantle**
- Timer
- Minimum sound level of 30 dB
- Maximum Airflow 90 m3/h
- 220-240V 50/60Hz, class B
- Outlet diameter 100

SILENTIS LN 10
Cod.: **01072000** EAN: **8422248070355**

- **Front cover easy to dismantle**
- Minimum sound level of 30 dB
- Maximum Airflow 90 m3/h
- 220-240V 50/60Hz, class B
- Outlet diameter 100

SILENTIS LN 10 INOX
Cod.: **01072300** EAN: **8422248070362**

- **Front cover easy to dismantle**
- Minimum sound level of 30 dB
- Maximum Airflow 90 m3/h
- 220-240V 50/60Hz, class B
- Outlet diameter 100

SILENTIS 12
Cod.: **01080000** EAN: **8422248016971**

- **Front cover easy to dismantle**
- Minimum sound level of 39 dB
- Maximum Airflow 190 m3/h
- 220-240V 50/60Hz, class B
- Outlet diameter 120

SILENTIS SERIES

SILENTIS 12 INOX
Cod.: **01080300** EAN: **8422248016995**

- **Front cover easy to dismantle**
- Minimum sound level of 39 dB
- Maximum Airflow 190 m3/h
- 220-240V 50/60Hz, class B
- Outlet diameter 120

SILENTIS 15
Cod.: **01090000** EAN: **8422248017015**

- **Front cover easy to dismantle**
- Minimum sound level of 41 dB
- Maximum Airflow 320 m3/h
- 220-240V 50/60Hz, class B
- Outlet diameter 150

B-PLUS SERIES

B-10 PLUS TIMER
Cod.: **00981101** EAN: **8422248049566**

- **Very slim to be installed in ceiling or wall**
- Timer
- Minimum sound level of 41 dB
- Maximum Airflow 98 m3/h
- 220-240V 50/60Hz, class B
- Outlet diameter 100

B-12 PLUS TIMER
Cod.: **00982100** EAN: **8422248113489**

- **Very slim to be installed in ceiling or wall**
- Minimum sound level of 43 dB
- Maximum Airflow 190 m3/h
- 220-240V 50/60Hz, class B
- Outlet diameter 120

B-PLUS SERIES

B-8 PLUS
Cod.: **00990000** EAN: **8422248113168**

- **Very slim to be installed in ceiling or wall**
- Minimum sound level of 39 dB
- Maximum Airflow 170 m3/h
- 220-240V 50/60Hz, class B
- Outlet diameter 90

B-10 PLUS
Cod.: **00281000** EAN: **8422248047210**

- **Very slim to be installed in ceiling or wall**
- Minimum sound level of 41 dB
- Maximum Airflow 98 m3/h
- 220-240V 50/60Hz, class B
- Outlet diameter 10**0**

B-12 PLUS
Cod.: **00282000** EAN: **8422248053969**

- **Very slim to be installed in ceiling or wall**
- Minimum sound level of 43 dB
- Maximum Airflow 190 m3/h
- 220-240V 50/60Hz, class B
- Outlet diameter 120

B-15 PLUS
Cod.: **00983000** EAN: **8422248114226**

- **Very slim to be installed in ceiling or wall**
- Minimum sound level of 43 dB
- Maximum Airflow 320 m3/h
- 220-240V 50/60Hz, class B
- Outlet diameter 150

B SERIES

B-10 TIMER
Cod.: **00911000** EAN: **8422248110105**

- Short tube for wall or ceiling
- Timer
- Minimum sound level of 41 dB
- Maximum Airflow 98 m3/h
- 220-240V 50/60Hz, class B
- Outlet diameter 100

B-10
Cod.: **00910000** EAN: **8422248110006**

- Short tube for wall or ceiling
- Minimum sound level of 41 dB
- Maximum Airflow 98 m3/h
- 220-240V 50/60Hz, class B
- Outlet diameter 100

B-12
Cod.: **00920000** EAN: **8422248110501**

- Short tube for wall or ceiling
- Minimum sound level of 43 dB
- Maximum Airflow 190 m3/h
- 220-240V 50/60Hz, class B
- Outlet diameter 120

B-15
Cod.: **00930000** EAN: **8422248110907**

- Short tube for wall or ceiling
- Minimum sound level of 43 dB
- Maximum Airflow 320 m3/h
- 220-240V 50/60Hz, class B
- Outlet diameter 150

DUCT IN LINE SERIES

DUCT IN LINE 100/130
Cod.: **00770000** EAN: **8422248920735**

- In-line mixed flow fans
- Asynchronous motor
- External terminal box
- Minimum sound level of 24 dB
- Maximum Airflow 130 m3/h
- 220-240V 50/60Hz, class B
- Outlet diameter 100

DUCT IN-LINE 100/270
Cod.: **00702000** EAN: **8422248021203**

- In-line mixed flow fans
- Asynchronous motor
- External terminal box
- Minimum sound level of 24 dB
- Maximum Airflow 270m3/h
- 230V 50Hz, class B
- Outlet diameter 100

DUCT IN LINE SERIES

DUCT IN-LINE 125/320
Cod.: **00703000** EAN: **8422248021227**

- In-line mixed flow fans
- Asynchronous motor
- External terminal box
- Minimum sound level of 26 dB
- Maximum Airflow 365 m3/h
- 230V 50Hz, class B
- Outlet diameter 125

DUCT IN-LINE 150/560
Cod.: **00704000** EAN: **8422248021241**

- In-line mixed flow fans
- Asynchronous motor
- External terminal box
- Minimum sound level of 27 dB
- Maximum Airflow 115 m3/h
- 230V 50Hz, class B
- Outlet diameter 150

DUCT IN-LINE 160/560
Cod.: **00705000** EAN: **8422248021265**

- In-line mixed flow fans
- Asynchronous motor
- External terminal box
- Minimum sound level of 27 dB
- Maximum Airflow 595 m3/h
- 230V 50Hz, class B
- Outlet diameter 160

DUCT IN-LINE 200/910
Cod.: **00706000** EAN: **8422248021289**

- In-line mixed flow fans
- Asynchronous motor
- External terminal box
- Minimum sound level of 32 dB
- Maximum Airflow 910 m3/h
- 230V 50Hz, class B
- Outlet diameter 200

MT SERIES

MT-100
Cod.: **00710000** EAN: **8422248920186**

- Duct fans for installation in rigid and flexible tubes
- Minimum sound level of 41 dB
- Maximum Airflow 98 m3/h
- 220-240V 50/60Hz, class B
- Outlet diameter 100

MT-125
Cod.: **00720000** EAN: **8422248920520**

- Duct fans for installation in rigid and flexible tubes
- Minimum sound level of 43 dB
- Maximum Airflow 190 m3/h
- 230V 50Hz, class B
- Outlet diameter 125

MT-150
Cod.: **00730000** EAN: **8422248920797**

- Duct fans for installation in rigid and flexible tubes
- Minimum sound level of 45 dB
- Maximum Airflow 320 m3/h
- 230V 50Hz, class B
- Outlet diameter 150

LHV SERIES

LHV 160
Cod.: **00660000** EAN: **8422248009324**

- Helicoidal fans to be installed in walls or windows
- Minimum sound level of 40 dB
- Maximum Airflow 450 m3/h
- 230V 50Hz, class B
- Outlet diameter 160

LHV 190
Cod.: **00661000** EAN: **8422248009331**

- Helicoidal fans to be installed in walls or windows
- Minimum sound level of 42 dB
- Maximum Airflow 700 m3/h
- 230V 50Hz, class B
- Outlet diameter 190

LHV 225
Cod.: **00662000** EAN: **8422248009348**

- Helicoidal fans to be installed in walls or windows
- Minimum sound level of 44 dB
- Maximum Airflow 900 m3/h
- 230V 50Hz, class B
- Outlet diameter 225

LHV 300
Cod.: **00663000** EAN: **8422248009355**

- Helicoidal fans to be installed in walls or windows
- Minimum sound level of 47 dB
- Maximum Airflow 1450 m3/h
- 230V 50Hz, class B
- Outlet diameter 300

cata green innovation

CTRS-100 REV SLIM
Cod.: **03114001** EAN: **8422248102520**

- Square slim exterior shape electric water heater 93 litres
- Reversible horizontal and vertical installation
- Digital display control
- Electronically adjustable temperature with display (accuracy to 1ºC)
- Magnesium anode
- Safety valve with draining appliance
- Max. power: 2.000 W

CTRS-80 REV SLIM
Cod.: **03112001** EAN: **8422248081474**

- Square slim exterior shape electric water heater 74 litres
- Reversible horizontal and vertical installation
- Digital display control
- Electronically adjustable temperature with display (accuracy to 1ºC)
- Magnesium anode
- Safety valve with draining appliance
- Max. power: 2.000 W

CTRS-50 REV SLIM
Cod.: **03111001** EAN: **8422248081467**

- Square slim exterior shape electric water heater 46 litres
- Reversible horizontal and vertical installation
- Digital display control
- Electronically adjustable temperature with display (accuracy to 1ºC)
- Magnesium anode
- Safety valve with draining appliance
- Max. power: 2.000 W

CTRH-80-REV
Cod.: **03112004** EAN: **8422248081580**

- Round exterior shape electric water heater 73 litres
- Reversible horizontal and vertical installation
- Mechanic display control
- ECO intelligent mode
- Magnesium anode
- Safety valve with draining appliance
- Total power: 1.500 W

CTRH-50-REV
Cod.: **03111004** EAN: **8422248081573**

- Round exterior shape electric water heater.46 litres
- Reversible horizontal and vertical installation
- Mechanic display control
- ECO intelligent mode
- Magnesium anode
- Safety valve with draining appliance
- Total power: 1.500 W

CTR-100-M
Cod.: **03113001** EAN: **8422248081559**

- Round exterior shape electric water heater 100 litres
- Vertical installation
- Mechanic display control
- ECO intelligent mode
- Magnesium anode
- Safety valve with draining appliance
- Total power: 1.500 W

CTR-80-M
Cod.: **03112003** EAN: **8422248081542**

- Round exterior shape electric water heater. 80 litres
- Vertical installation
- Mechanic display control
- ECO intelligent mode
- Magnesium anode
- Safety valve with draining appliance
- Total power: 1.500 W

CTR-50-M
Cod.: **03111003** EAN: **8422248081535**

- Round exterior shape electric water heater. 50 litres
- Vertical installation
- Mechanic display control
- ECO intelligent mode
- Magnesium anode
- Safety valve with draining appliance
- Total power: 1.500 W

CTR-30-M
Cod.: **03110001** EAN: **8422248081528**

- Round exterior shape electric water heater. 30 litres
- Vertical installation
- Mechanic display control
- ECO intelligent mode
- Magnesium anode
- Safety valve with draining appliance
- Total power: 1.500 W

CTRC-30-M
Cod.: **03110003** EAN: **8422248096621**

- 30 liter electric water heater over / under sink
- Vertical installation
- Mechanic display control
- Magnesium anode
- Safety valve with draining appliance
- Potencia total: 1.500 W

CTRC-15-M
Cod.: **03109000** EAN: **8422248096638**

- 15 liter electric water heater over / under sink
- Vertical installation
- Mechanic display control
- Magnesium anode
- Safety valve with draining appliance
- Potencia total: 1.500 W

DIMENSION DRAWING
TECHNICALINFORMATION&ACCESSORIES

AS 750
Cod.: **08000400** EAN: **8422248078283**

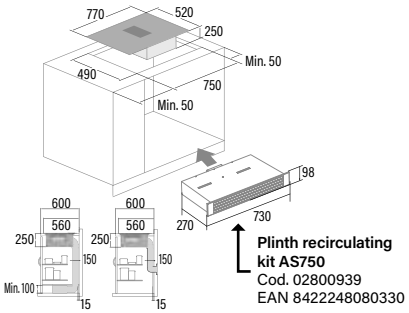

IAS 770
Cod.: **08000403** EAN: **8422248102568**

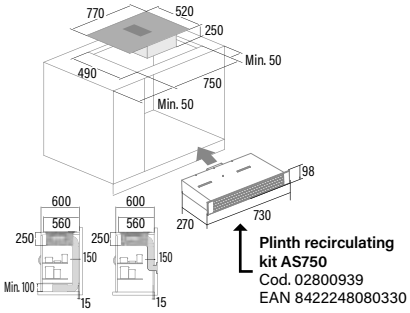

ISLA MAGRABA
Cod.: **02119207** EAN: **8422248069342**

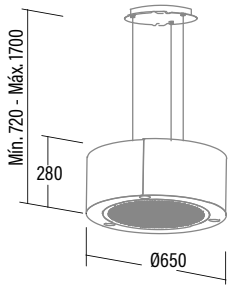

ISLA MOON
Cod.: **02119203** EAN: **8422248062084**

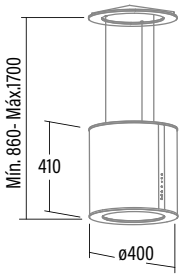

ISLA FARO X
Cod.: **02119101** EAN: **8422248074230**

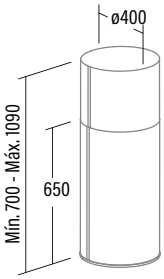

ISLA BENNU SLIM 1200 X
Cod.: **02111307** EAN: **8422248094337**

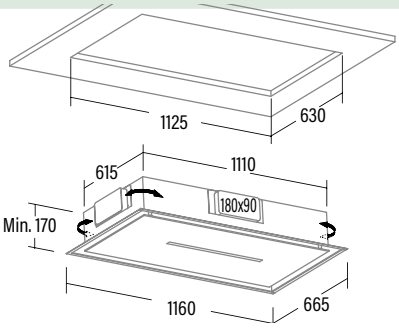

ISLA BENNU SLIM 900 X
Cod.: **02111306** EAN: **8422248094313**

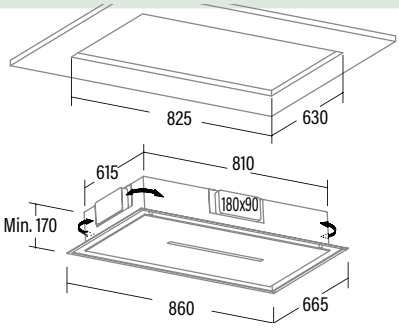

ISLA SIRIN 1000 GWH
Cod.: **02111002** EAN: **8422248097437**

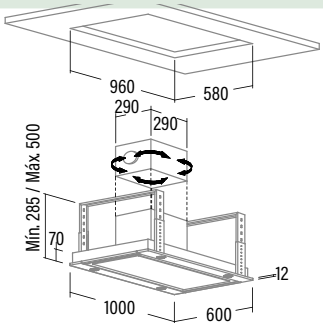

ISLA SIRIN 1000 WH
Cod.: **02111001** EAN: **8422248077750**

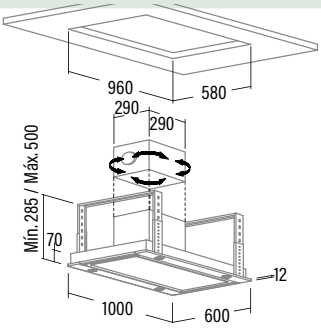

ISLA FENIX 1000 X
Cod.: **02111305** EAN: **8422248077798**

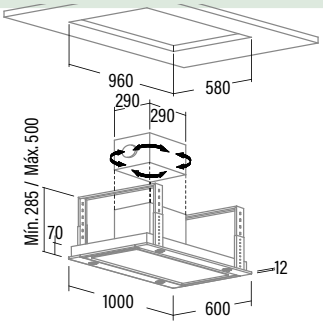

ISLA LEGEND 900 XGBK
Cod.: **02097202** EAN: **8422248061681**

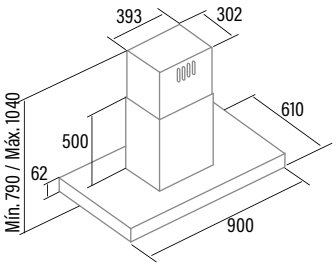

ISLA SYGMA 900 X
Cod.: **02197313** EAN: **8422248062121**

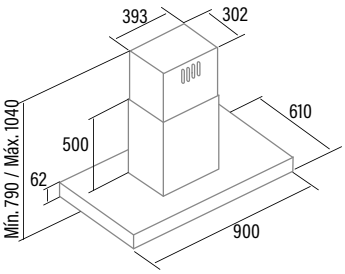

ISLA GAMMA 900 X
Cod.: **02025205** EAN: **8422248077736**

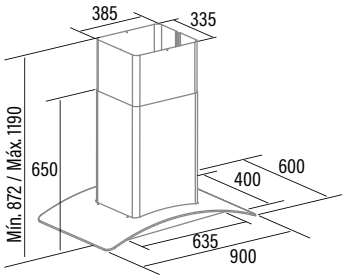

ISLA VEGA X
Cod.: **02119311** EAN: **8422248077743**

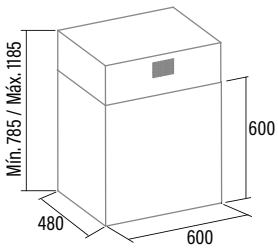

ANGOLO BOX 1000 X
Cod.: **02195309** EAN: **8422248077774**

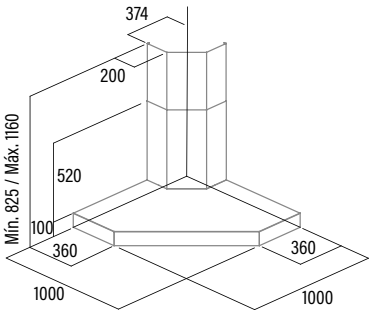

ANGOLO X
Cod.: **02195310** EAN: **8422248077781**

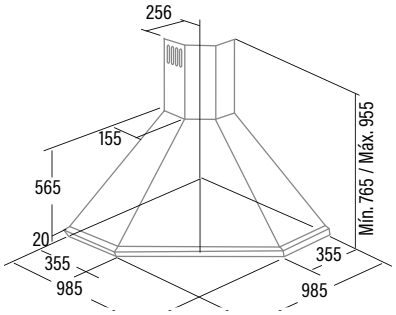

GRECO PRO SILENCE 90 BK
Cod.: **02184406** EAN: **8422248102032**

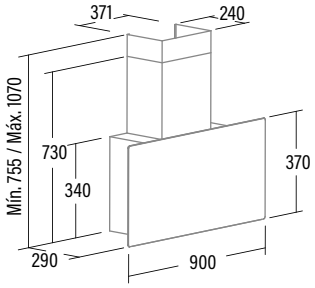

GRECO PRO SILENCE 90 WH
Cod.: **02184006** EAN: **8422248102445**

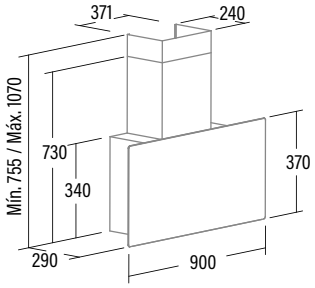

GLADIUS PRO SILENCE 900 XGBK
Cod.: **02181306** EAN: **8422248102049**

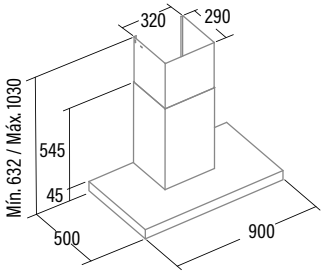

PRO SILENCE
Cod.: **02000103** EAN: **8422248102025**

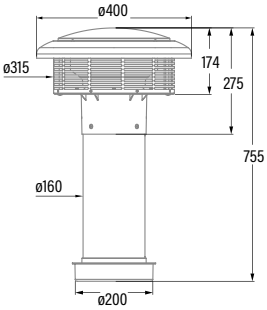

GOYA PRO 90 BK
Cod.: **02184401** EAN: **8422248080613**

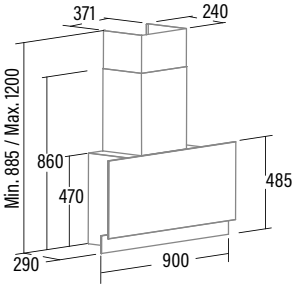

GOYA 90 BK CATA&ROCA
Cod.: **02184402** EAN: **8422248106108**

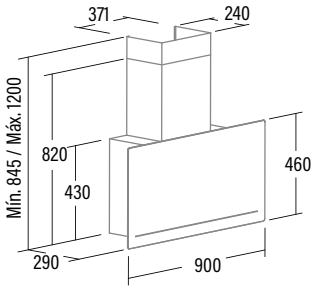

GOYA 70 BK CATA&ROCA
Cod.: **02133401** EAN: **8422248106115**

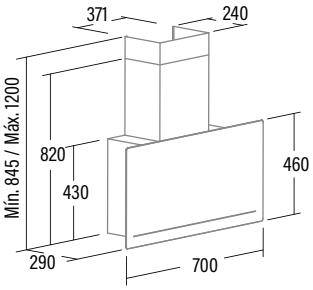

GOYA 90 WH CATA&ROCA
Cod.: **02184001** EAN: **8422248106122**

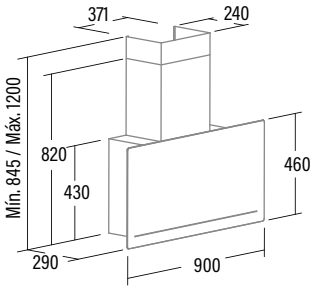

GOYA 70 WH CATA&ROCA
Cod.: **02133001** EAN: **8422248106139**

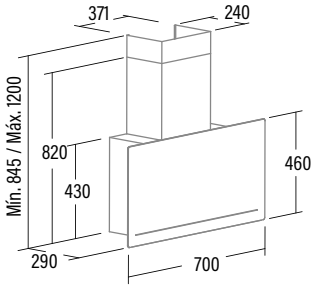

GRECO 90 BK CATA&ROCA
Cod.: **02184407** EAN: **8422248106146**

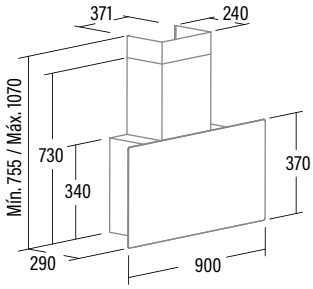

GRECO 90 WH CATA&ROCA
Cod.: **02184007** EAN: **8422248106153**

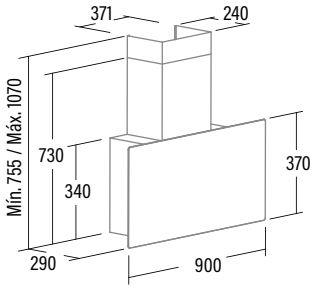

GRECO 80 BK CATA&ROCA
Cod.: **02145407** EAN: **8422248106160**

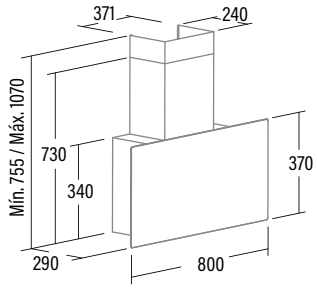

GRECO 80 GR CATA&ROCA
Cod.: **02145203** EAN: **8422248106177**

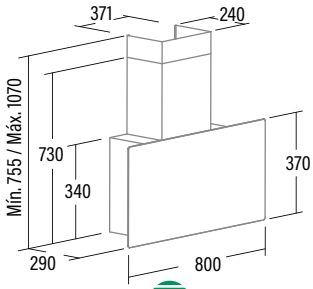

GRECO 80 WH CATA&ROCA
Cod.: **02145007** EAN: **8422248106184**

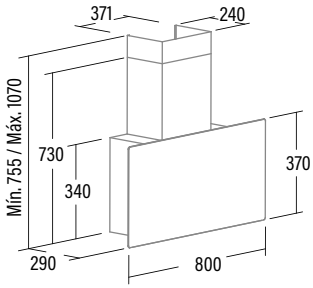

GRECO 70 BK CATA&ROCA
Cod.: **02133407** EAN: **8422248106191**

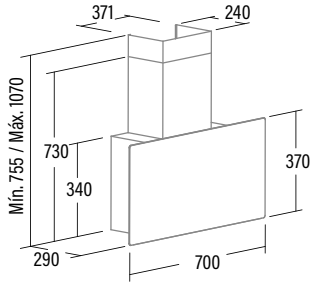

GRECO 70 WH CATA&ROCA
Cod.: **02133007** EAN: **8422248106207**

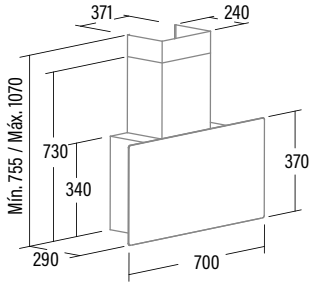

THALASSA 1200XGBK
Cod.: **02157403** EAN: **8422248073790**

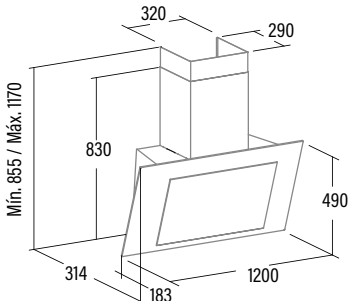

THALASSA 900XGBK
Cod.: **02159405** EAN: **8422248104777**

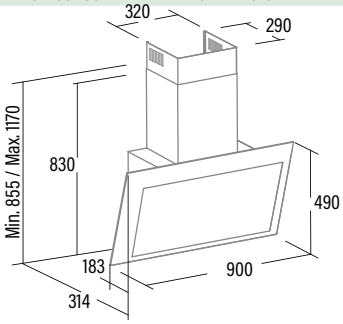

THALASSA 900XGWH
Cod.: **02159006** EAN: **8422248104821**

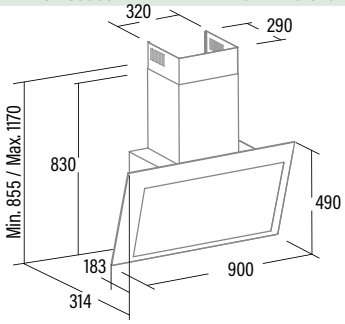

THALASSA 900XGGR
Cod.: **02159506** EAN: **8422248104869**

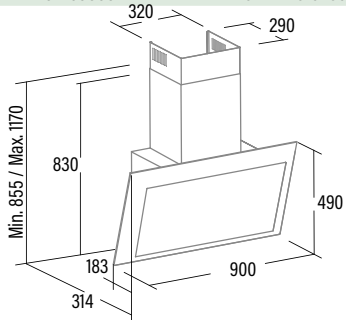

THALASSA 800XGBK
Cod.: **02145406** EAN: **8422248104791**

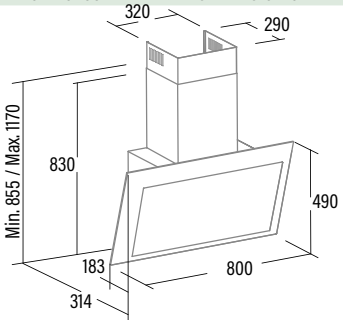

THALASSA 800XGWH
Cod.: **02145006** EAN: **8422248104838**

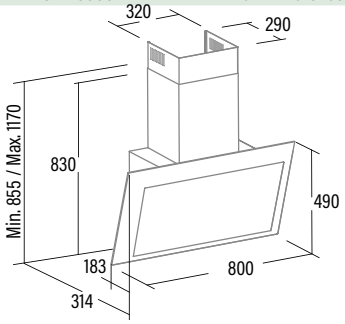

THALASSA 800XGGR
Cod.: **02145506** EAN: **8422248104876**

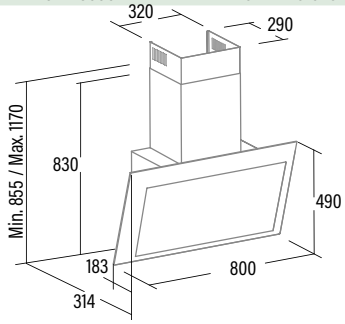

THALASSA 700XGBK
Cod.: **02178207** EAN: **8422248104807**

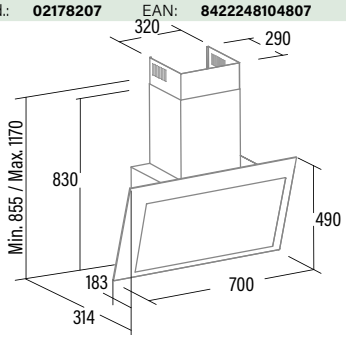

THALASSA 700XGWH
Cod.: **02178007** EAN: **8422248104845**

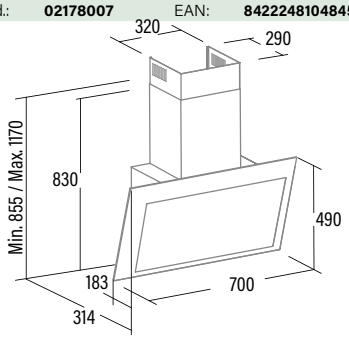

THALASSA 600XGBK
Cod.: **02127211** EAN: **8422248104814**

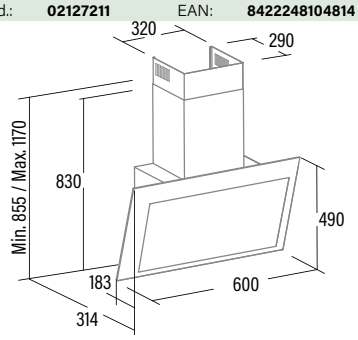

THALASSA 600XGWH
Cod.: **02127011** EAN: **8422248104852**

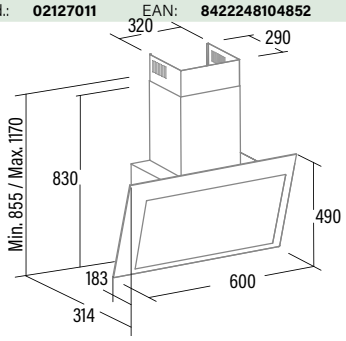

VALTO 900 XGBK
Cod.: **02059401** EAN: **8422248094030**

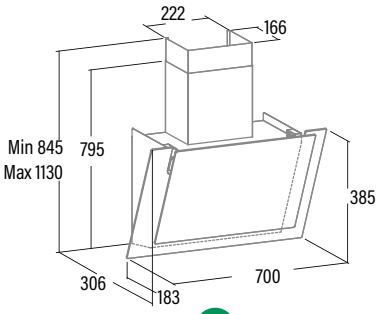

VALTO 700 XGBK
Cod.: **02078402** EAN: **8422248094047**

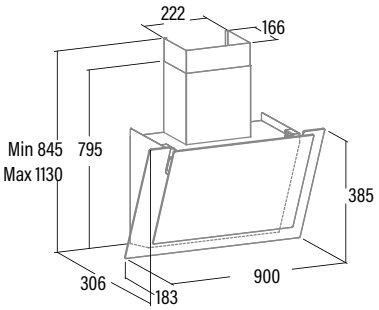

VALTO 600 XGBK
Cod.: **02027505** EAN: **8422248094054**

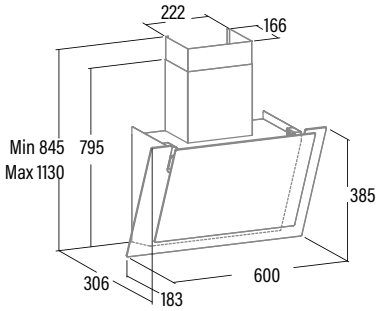

VALTO 900 XGWH
Cod.: **02059008** EAN: **8422248094061**

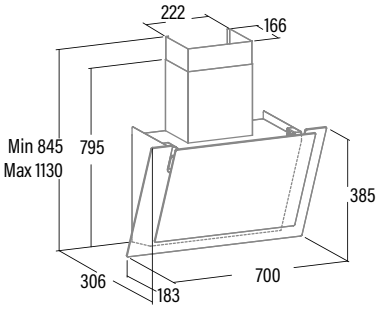

VALTO 700 XGWH
Cod.: **02078003** EAN: **8422248094078**

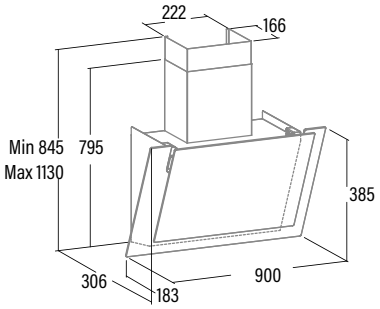

VALTO 600 XGWH
Cod.: **02027107** EAN: **8422248094085**

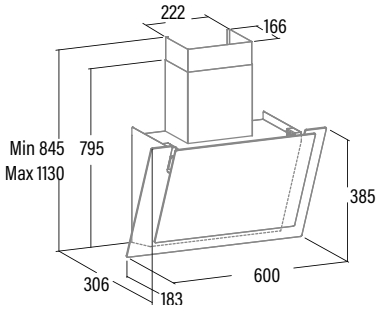

WANDA 900 XGBK
Cod. : **02059405** EAN : **8422248102308**

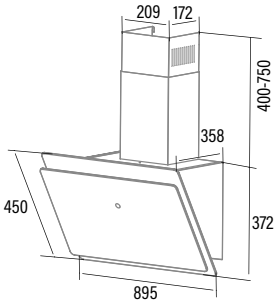

WANDA 700 XGBK
Cod. : **02078405** EAN : **8422248102315**

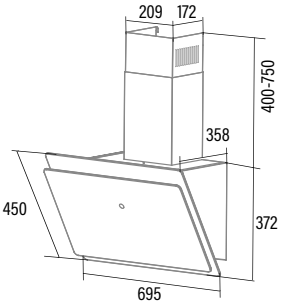

WANDA 600 XGBK
Cod. : **02027210** EAN : **8422248102322**

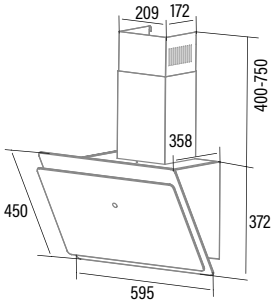

WANDA 900 XGWH
Cod. : **02059010** EAN : **8422248102339**

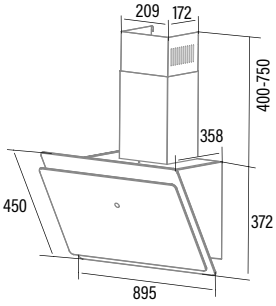

WANDA 700 XGWH
Cod.: **02078006** EAN: **8422248102346**

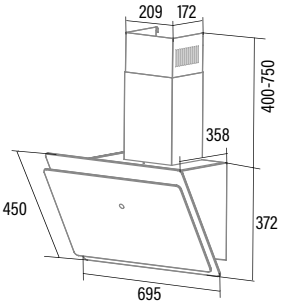

WANDA 600 XGWH
Cod. : **02027012** EAN : **8422248102353**

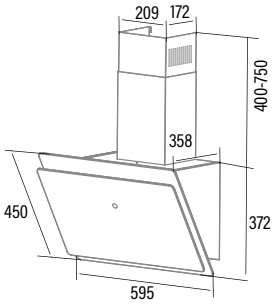

LENA 600XGBK
Cod.: **02032205** EAN: **8422248102292**

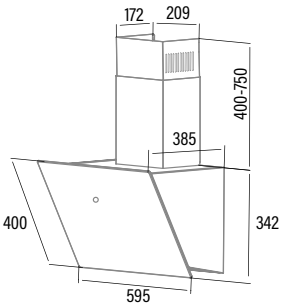

LENA 500XGBK
Cod.: **02032206** EAN: **8422248102377**

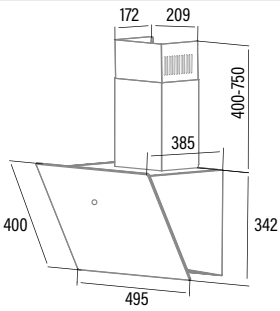

LENA 600XGWH
Cod.: **02032005** EAN: **8422248102285**

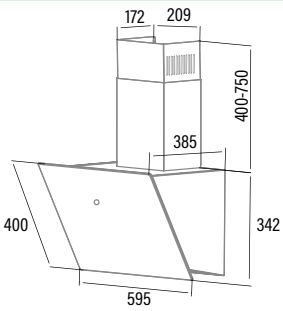

LENA 500XGWH
Cod.: **02032006** EAN: **8422248102360**

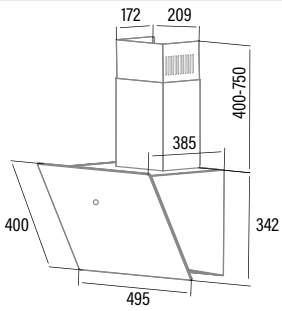

GLADIUS 900 XGBK CATA&CAN ROCA
Cod.: **02181302** EAN: **8422248082266**

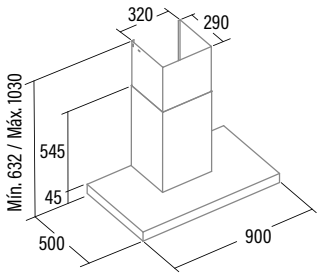

LEGEND 9000 XGBK
Cod.: **02029207** EAN: **8422248101493**

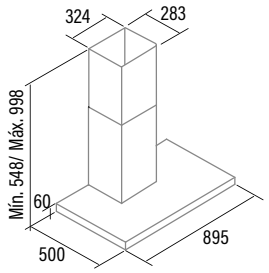

LEGEND 7000 XGBK
Cod.: **02021202** EAN: **8422248101509**

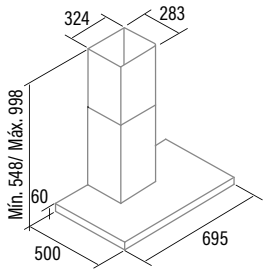

LEGEND 6000 XGBK
Cod.: **02060208** EAN: **8422248102544**

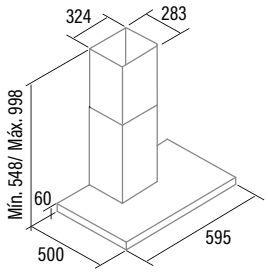

LEGEND 900 X
Cod.: **02029305** EAN: **8422248068635**

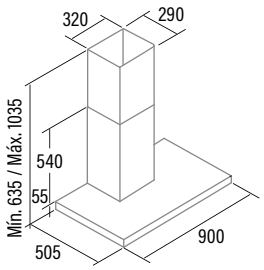

LEGEND 700 X
Cod.: **02021306** EAN: **8422248068659**

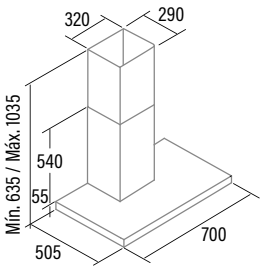

SYGMA 12000 X
Cod.: **02132304** EAN: **8422248062282**

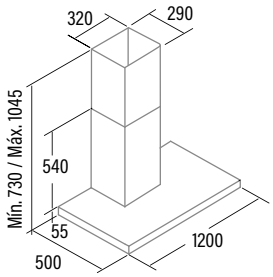

SYGMA 9000 X
Cod.: **02075303** EAN: **8422248073042**

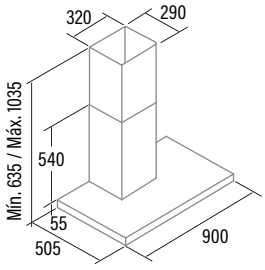

SYGMA 7000 X
Cod.: **02021307** EAN: **8422248073059**

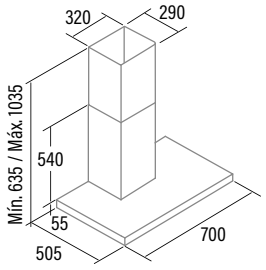

SYGMA 6000 X
Cod.: **02060308** EAN: **8422248073066**

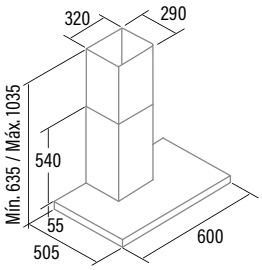

SYGMA 900 BK
Cod.: **02075400** EAN: **8422248068079**

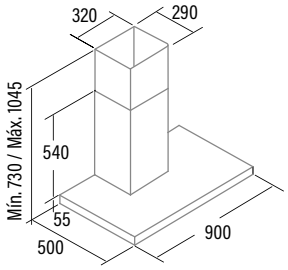

S PLUS 900 X
Cod.: **02029600** EAN: **8422248087070**

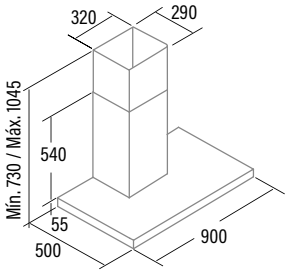

S PLUS 700 X
Cod.: **02021600** EAN: **8422248087087**

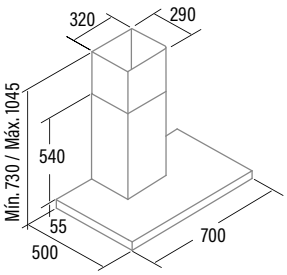

S PLUS 600 X
Cod.: **02060600** EAN: **8422248087094**

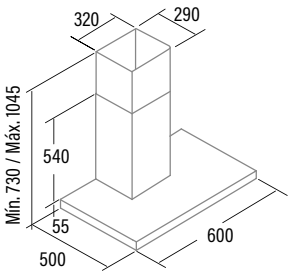

ST-9000 X **219 €**
Cod.: **02029309** EAN: **8422248108706**

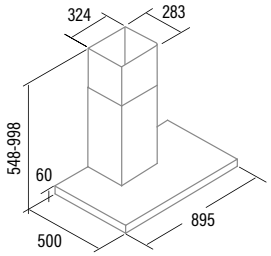

ST-7000 X
Cod.: **02021309** EAN: **8422248108690**

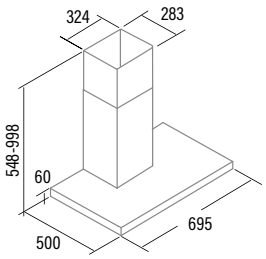

ST-6000 X
Cod.: **02060309** EAN: **8422248108683**

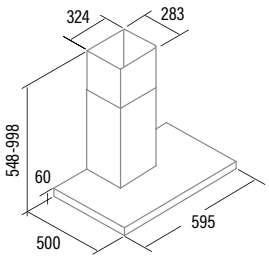

GAMMA 900 GX
Cod.: **02008210** EAN: **8422248061797**

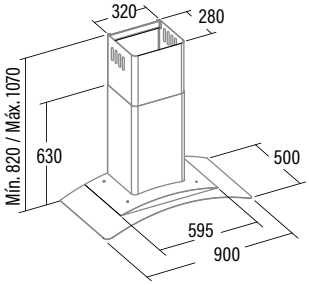

GAMMA 700 GX
Cod.: **02006205** EAN: **8422248061780**

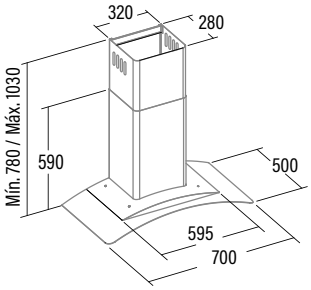

GAMMA 600 GX
Cod.: **02005219** EAN: **8422248061803**

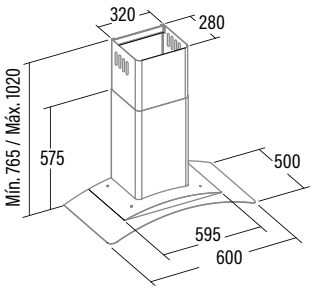

CG5-T900 X
Cod.: **02008199** EAN: **8422248095341**

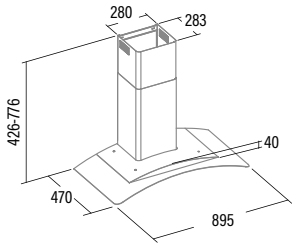

CG5-T600 X
Cod.: **02005199** EAN: **8422248095334**

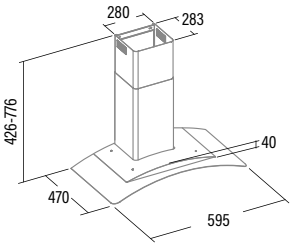

BETA 1200 X
Cod.: **02157309** EAN: **8422248062299**

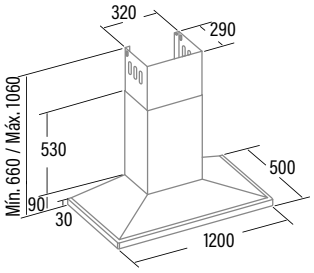

BETA 900 X
Cod.: **02051303** EAN: **8422248061827**

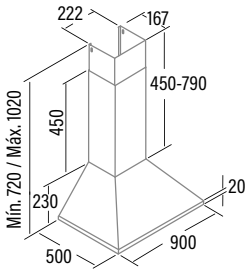

BETA 700 X
Cod.: **02093303** EAN: **8422248061834**

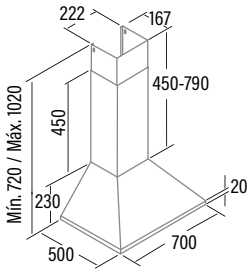

BETA 600 X
Cod.: **02050305** EAN: **8422248061841**

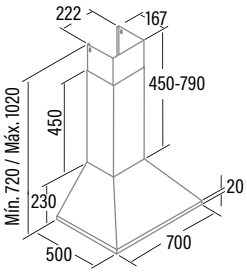

OMEGA 7500 X
Cod.: **02003307** EAN: **8422248101615**

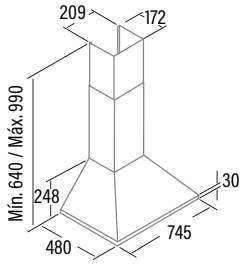

OMEGA 900 X
Cod.: **02004305** EAN: **8422248087193**

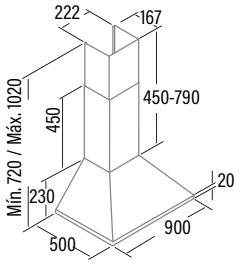

OMEGA 700 X
Cod.: **02003305** EAN: **8422248087209**

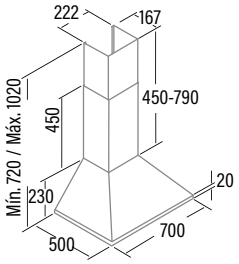

OMEGA 600 X
Cod.: **02002305** EAN: **8422248087216**

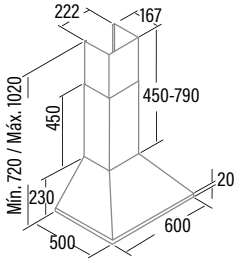

OMEGA 900 WH
Cod.: **02004005** EAN: **8422248087223**

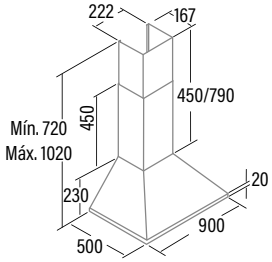

OMEGA 700 WH
Cod.: **02003005** EAN: **8422248087230**

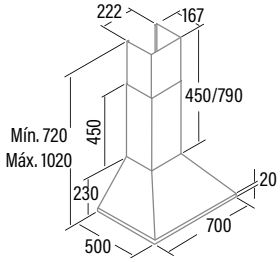

OMEGA 600 WH
Cod.: **02002005** EAN: **8422248087247**

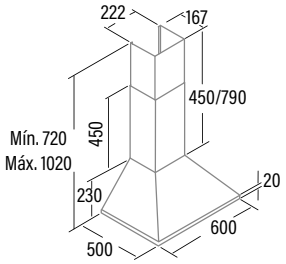

OMEGA 900 BK /L
Cod.: **02004403** EAN: **8422248087254**

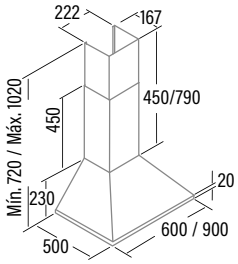

OMEGA 600 BK
Cod.: **02002403** EAN: **8422248087261**

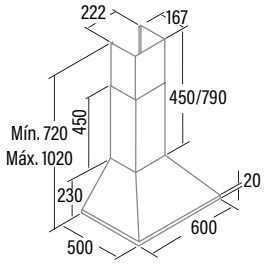

V-9000 X
Cod.: **02004397** EAN: **8422248106368**

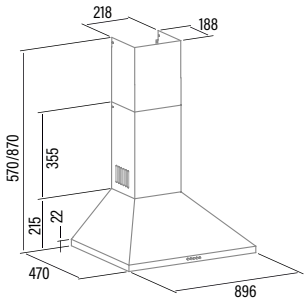

V-6000 X
Cod.: **02002397** EAN: **8422248106351**

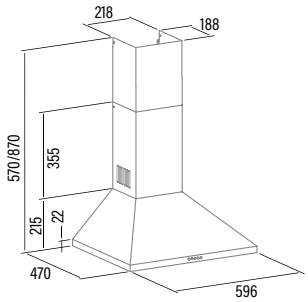

V-6000 WH
Cod.: **02002097** EAN: **8422248108492**

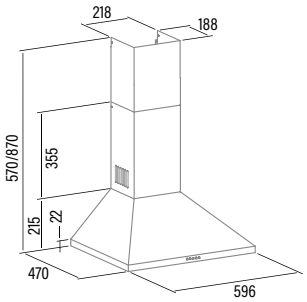

V-7000 X
Cod.: **02085301** EAN: **8422248108478**

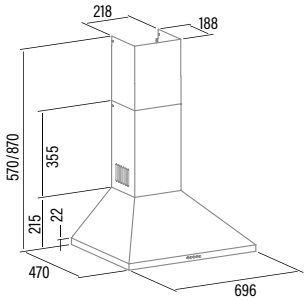

V-5000 X
Cod.: **02088306** EAN: **8422248108485**

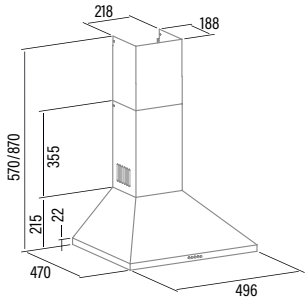

Q-7790 BK
Cod.: **02149402** EAN: **8422248084161**

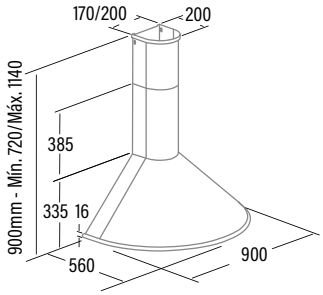

Q-7760 BK
Cod.: **02148402** EAN: **8422248084178**

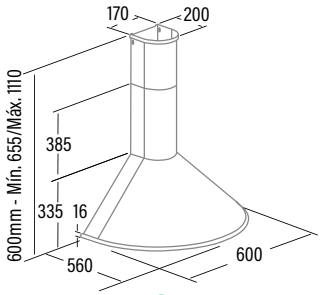

CHORUS XGX
Cod.: **02165202** EAN: **8422248070492**

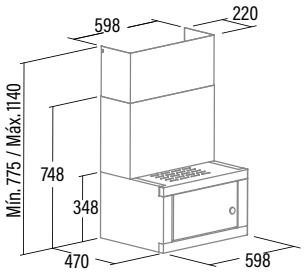

V3-S900 X
Cod.: **02063207** EAN: **8422248108072**

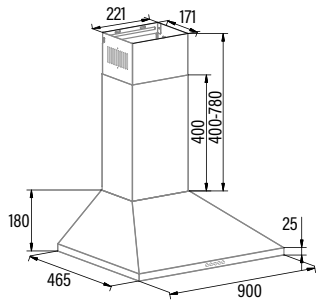

V3-S600X
Cod.: **02061207** EAN: **8422248102711**

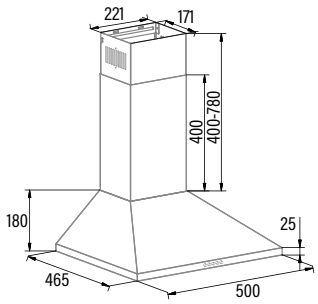

V3-S600 WH
Cod.: **02061007** EAN: **8422248102698**

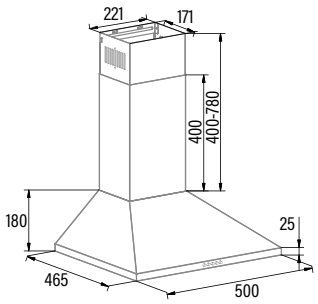

NEBLIA 600 X /A
Cod.: **02052300** EAN: **8422248017602**

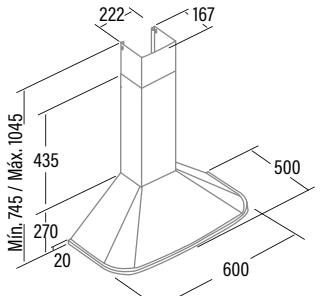

NEBLIA 500 INOX
Cod.: **02088310** EAN: **8422248039024**

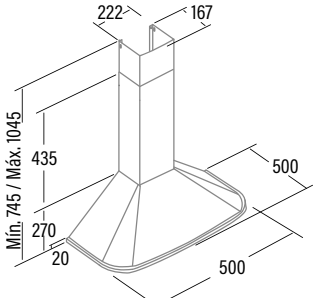

NEBLIA 600 BK
Cod.: **02052400** EAN: **8422248017619**

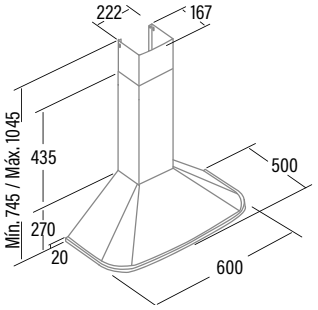

NEBLIA 600 WH
Cod.: **02052000** EAN: **8422248017596**

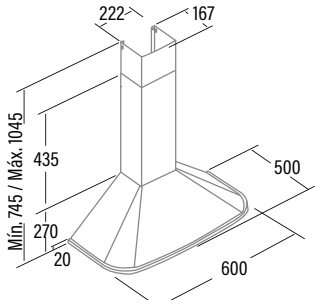

NEBLIA 500 WH
Cod.: **02088010** EAN: **8422248039031**

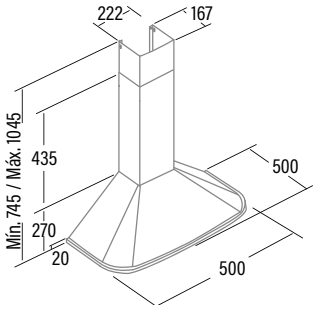

NEBLIA IVORY
Cod.: **02052803** EAN: **8422248059824**

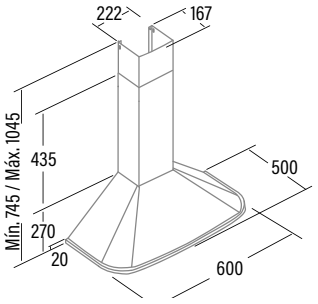

TENTA 90 GWH
Cod.: **02189005** EAN: **8422248093729**

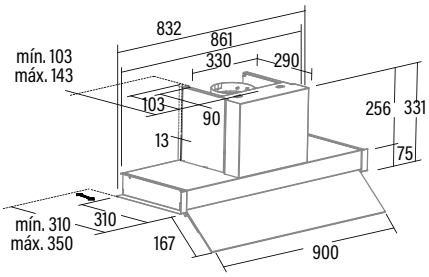

CORONA X 120
Cod.: **02186207** EAN: **8422248105774**

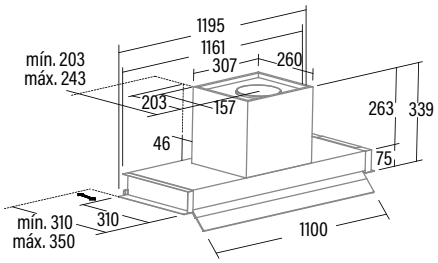

CORONA X 90
Cod.: **02189306** EAN: **8422248082327**

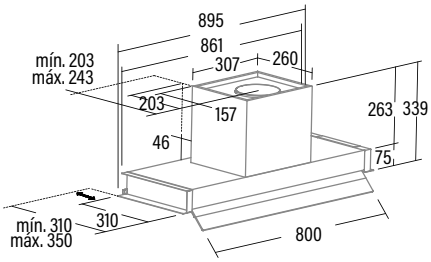

CORONA X 70
Cod.: **02186202** EAN: **8422248082334**

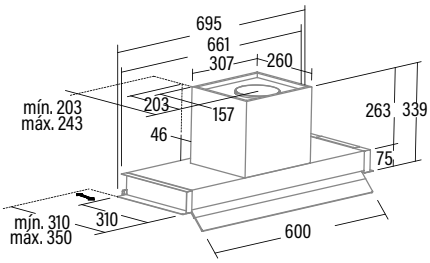

CORONA X 60
Cod.: **02186205** EAN: **8422248084314**

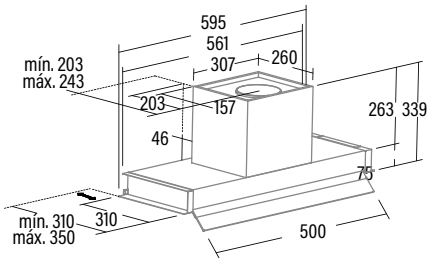

ARMONIA 90 X
Cod.: **02189307** EAN: **8422248082341**

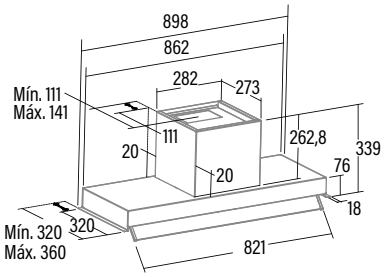

ARMONIA 60 X
Cod.: **02186203** EAN: **8422248082358**

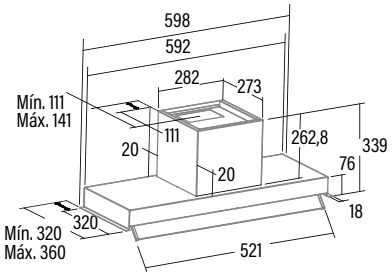

ARMONIA 45 X
Cod.: **02186206** EAN: **8422248105804**

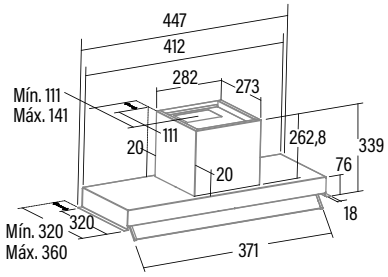

GC DUAL 75 WH
Cod.: **02131207** EAN: **8422248078313**

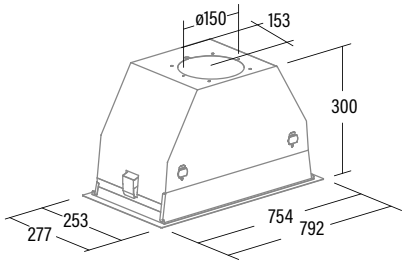

GC DUAL 45 WH
Cod.: **02130207** EAN: **8422248078290**

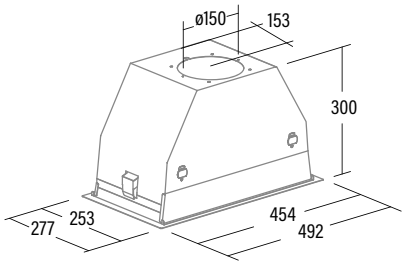

GC DUAL 75 BK
Cod.: **02131208** EAN: **8422248078320**

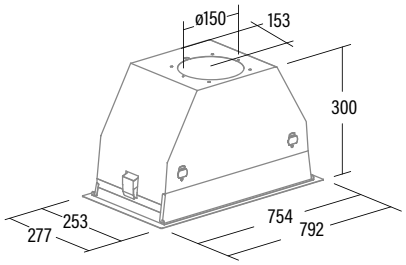

GC DUAL 45 BK
Cod.: **02130208** EAN: **8422248078306**

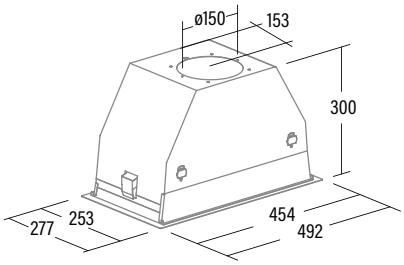

GCX 83 SD
Cod.: **02031308** EAN: **8422248103589**

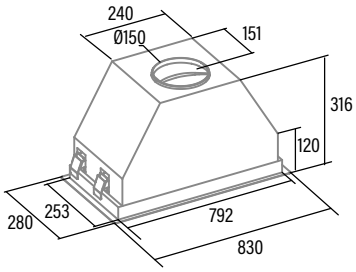

GCX 53 SD
Cod.: **02030308** EAN: **8422248103572**

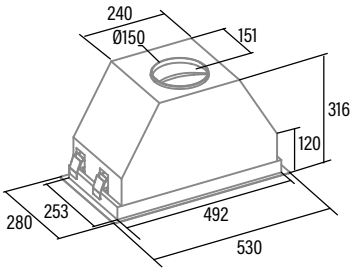

GP75X
Cod.: **02131303** EAN: **8422248075190**

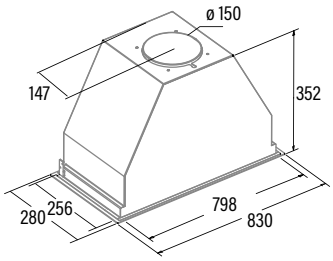

GP45X
Cod.: **02130303** EAN: **8422248075206**

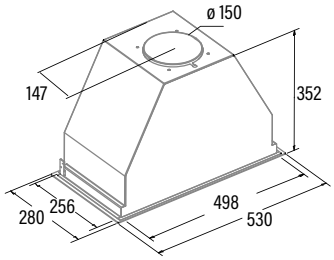

GL 75 X
Cod.: **02131305** EAN: **8422248077835**

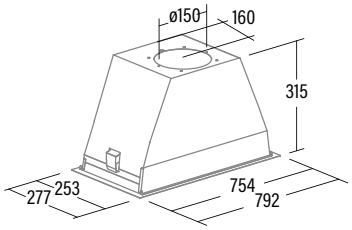

GL 45 X
Cod.: **02030305** EAN: **8422248077842**

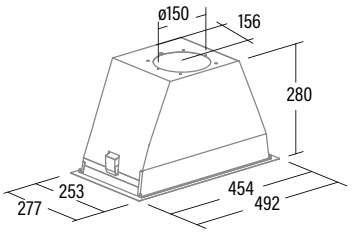

GT-PLUS 45 X
Cod.: **02030307** EAN: **8422248087346**

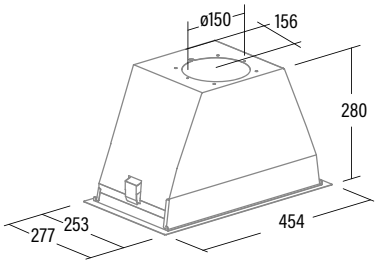

GT-PLUS 45 WH
Cod.: **02030007** EAN: **8422248087353**

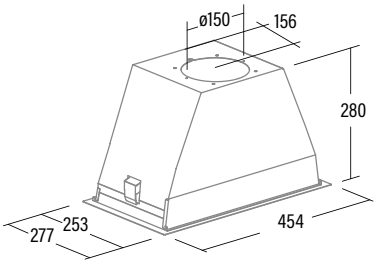

GT-PLUS 45 BK
Cod.: **02030407** EAN: **8422248087360**

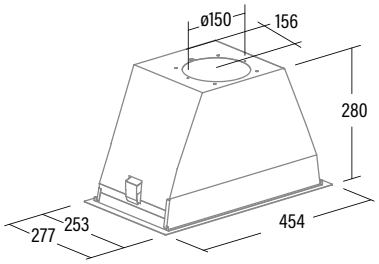

GCB 73 X
Cod.: **02031300** EAN: **8422248108461**

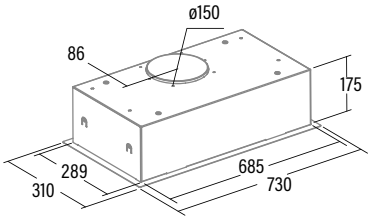

GCB 55 X
Cod.: **02030300** EAN: **8422248108454**

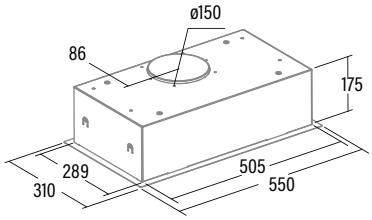

G 50 LUX GBK
Cod.: **02130402** EAN: **8422248082723**

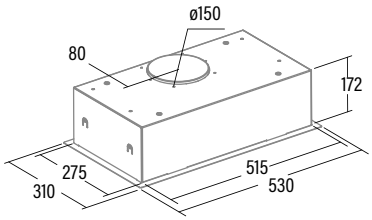

G 50 LUX GWH
Cod.: **02130005** EAN: **8422248082709**

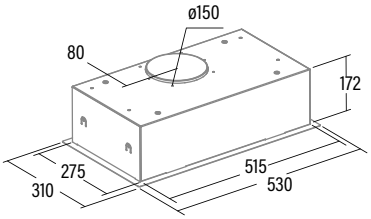

G 50 LUX X
Cod.: **02130302** EAN: **8422248082716**

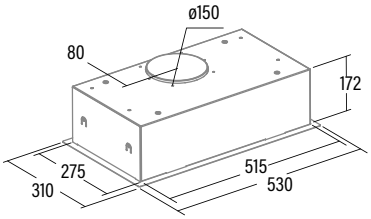

G-45 X
Cod.: **02039305** EAN: **8422248087377**

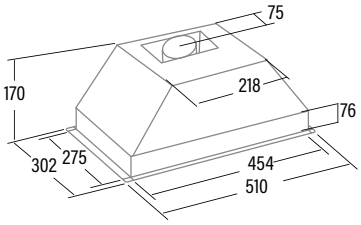

G-45 WH
Cod.: **02039005** EAN: **8422248087384**

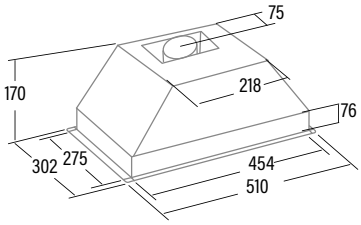

TFH-7600 GWH
Cod.: **02010203** EAN: **8422248061940**

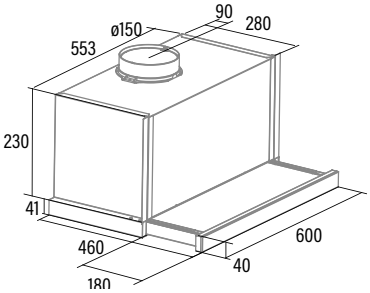

TFH-7600 X
Cod.: **02010305** EAN: **8422248069588**

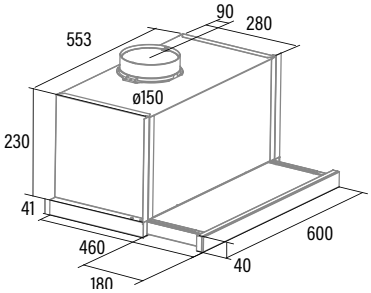

TFH 6630 X
Cod.: **02010300** EAN: **8422248082365**

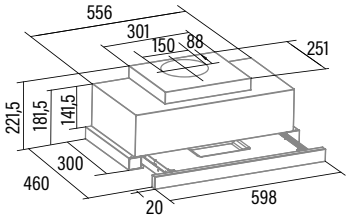

TFH 6630 WH
Cod.: **02010301** EAN: **8422248082396**

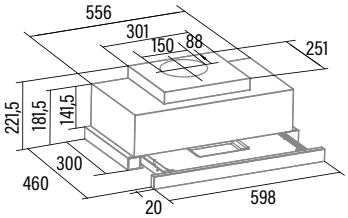

TFH 6630 BK
Cod.: **02010302** EAN: **8422248082402**

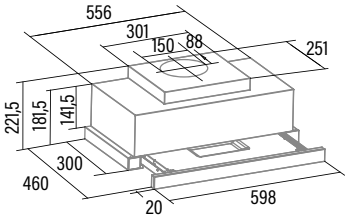

TFH 6430 X
Cod.: **02010608** EAN: **8422248105750**

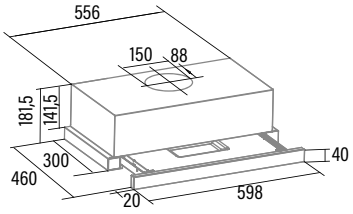

TFH 6430 GWH
Cod.: **02010008** EAN: **8422248105736**

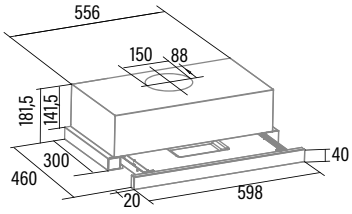

TFH 6430 GBK
Cod.: **02010408** EAN: **8422248105767**

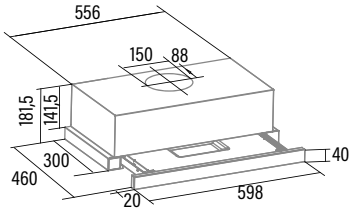

TF-2003 600 GWH /A
Cod.: **02017202** EAN: **8422248062008**

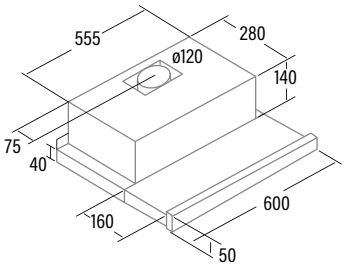

TF-2003 600 GBK /B
Cod.: **02017203** EAN: **8422248062015**

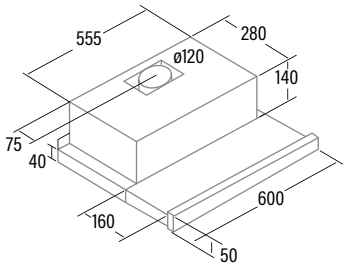

TF-2003 600 X
Cod.: **02017306** EAN: **8422248068819**

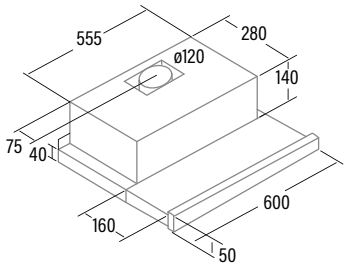

TF-2003 DURALUM 900
Cod.: **02094305** EAN: **8422248061964**

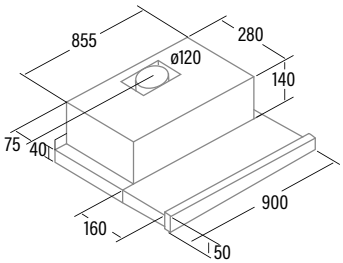

TF-2003 DURALUM 700
Cod.: **02089305** EAN: **8422248061971**

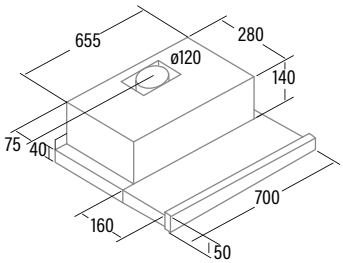

TF-2003 DURALUM 600
Cod.: **02017305** EAN: **8422248061988**

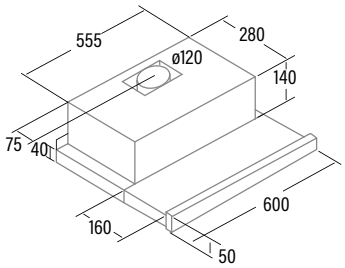

TF-5260 X
Cod.: **02034310** EAN: **8422248082129**

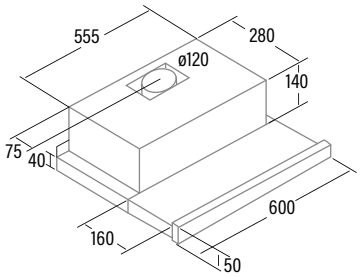

TF-5260 WH
Cod.: **02034501** EAN: **8422248082136**

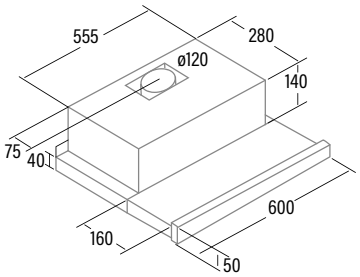

TFB-5160 X
Cod.: **02034606** EAN: **8422248101998**

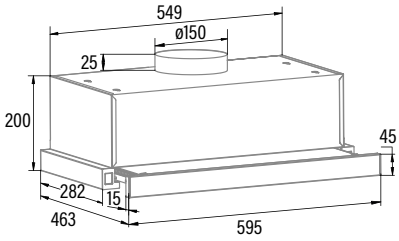

TFB-5160 WH
Cod.: **02034107** EAN: **8422248102001**

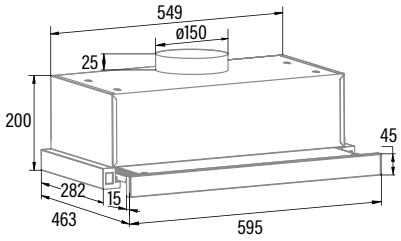

S-BOX X
Cod.: **02001301** EAN: **8422248062039**

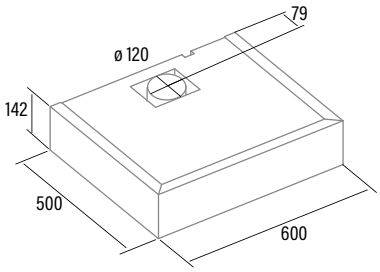

LF-2060 X
Cod.: **02011317** EAN: **8422248105231**

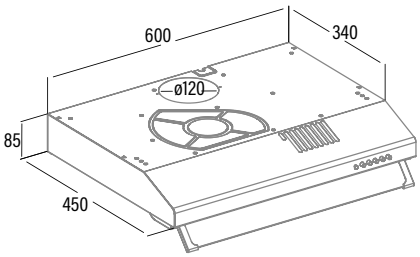

LF-2060 WH
Cod.: **02011017** EAN: **8422248105224**

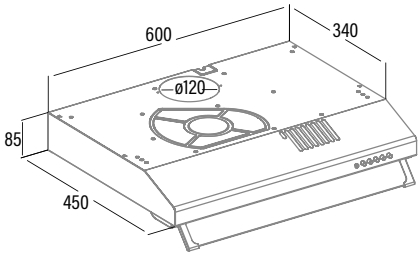

TFB-5160 BK
Cod.: **02034408** EAN: **8422248108096**

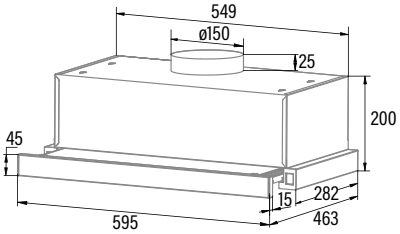

TF-5250 X
Cod.: **02097305** EAN: **8422248086264**

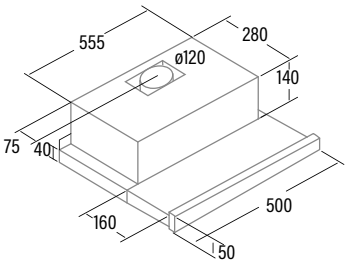

TF-5250 WH
Cod.: **02097002** EAN: **8422248086271**

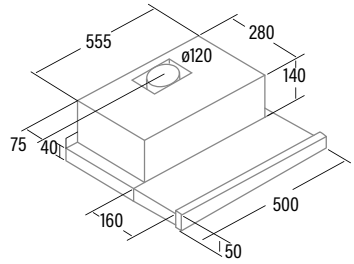

TFB-5150 X
Cod.: **02097306** EAN: **8422248102018**

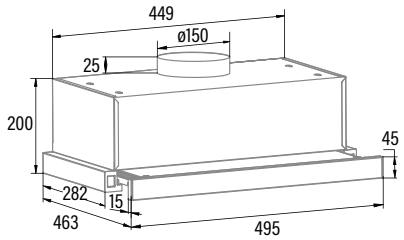

TF-5060 X
Cod.: **02033309** EAN: **8422248086059**

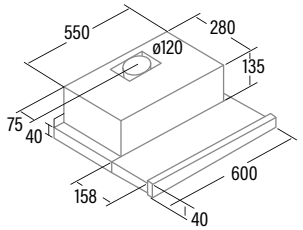

F-2060 X
Cod.: **02011309** EAN: **8422248082075**

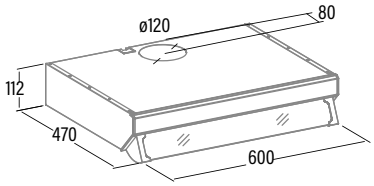

F-2050 X
Cod.: **02015306** EAN: **8422248086103**

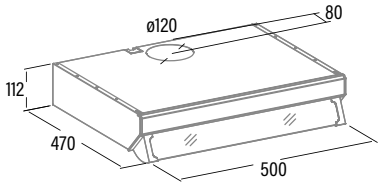

F-2060 WH
Cod.: **02011012** EAN: **8422248082105**

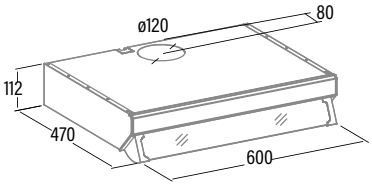

F-2050 WH
Cod.: **02015006** EAN: **8422248086110**

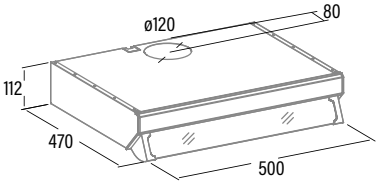

F-2060 BK
Cod.: **02011408** EAN: **8422248083027**

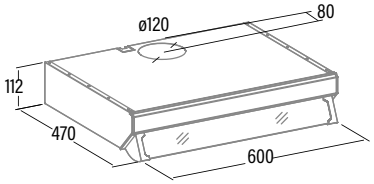

F-2290 X
Cod.: **02014302** EAN: **8422248168946**

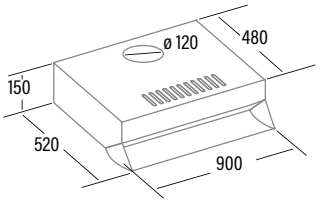

P-3260 X
Cod.: **02026306** EAN: **8422248085854**

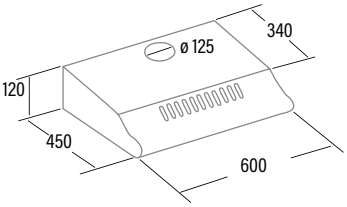

P-3260 WH
Cod.: **02026006** EAN: **8422248085861**

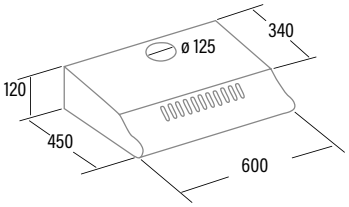

P-3060 X
Cod.: **02028307** EAN: **8422248086073**

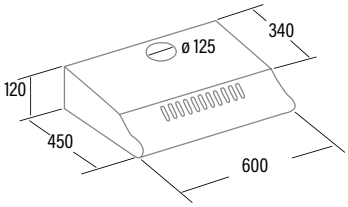

P-3050 X
Cod.: **02096303** EAN: **8422248086097**

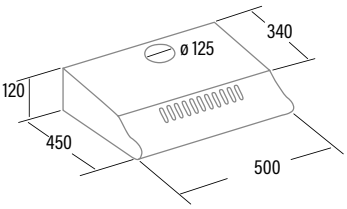

P-3060 WH
Cod.: **02028008** EAN: **8422248086080**

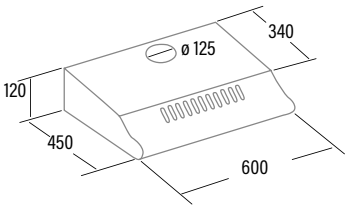

P-3050 WH
Cod.: **02096005** EAN: **8422248086288**

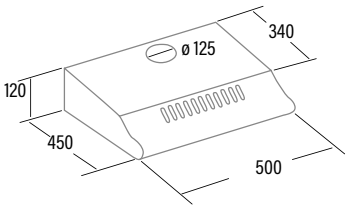

MT 9011 PRO BK
Cod.: **07047400** EAN: **8422248080637**

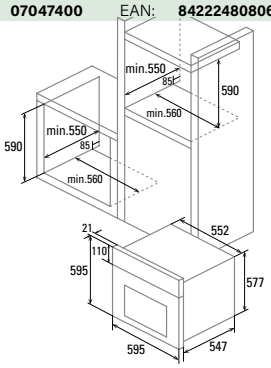

MT 8012 BK
Cod.: **07002411** EAN: **8422248094009**

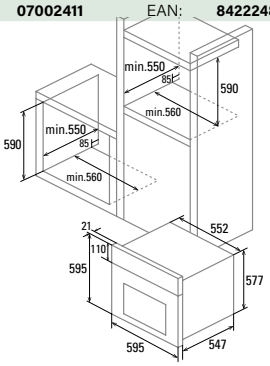

MT 8012 WH
Cod.: **07002412** EAN: **8422248094016**

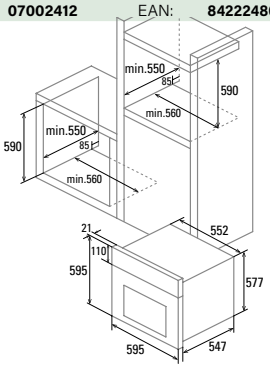

PR 6011 XGBK
Cod.: **07001006** EAN: **8422248103350**

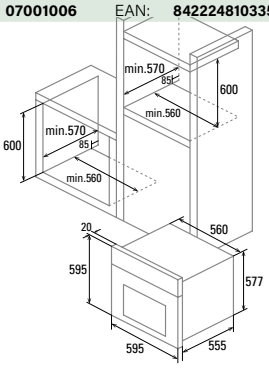

MDS 7208 X
Cod.: **07001507** EAN: **8422248095464**

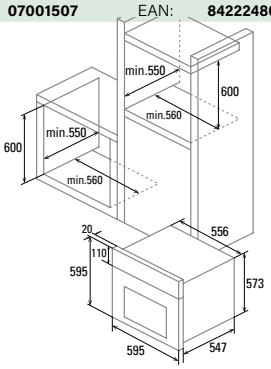

MDS 7208 WH
Cod.: **07001005** EAN: **8422248095587**

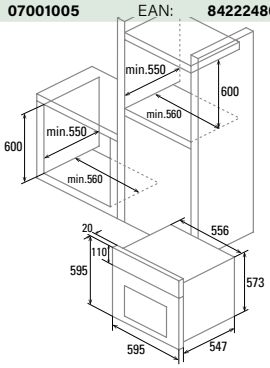

MDS 7208 BK
Cod.: **07001403** EAN: **8422248095594**

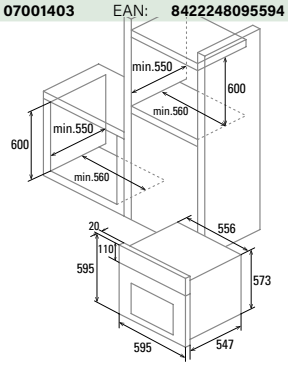

MDS 7206 X
Cod.: **07034602** EAN: **8422248095556**

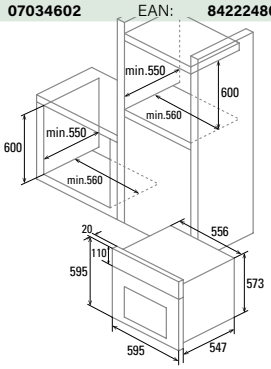

MD 6106X
Cod.: **07033303** EAN: **8422248076029**

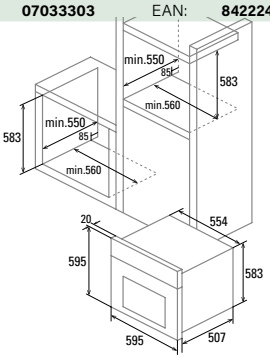

MDS 7206 WH
Cod.: **07034100** EAN: **8422248095563**

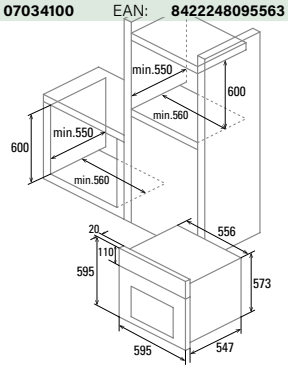

MDS 7206 BK
Cod.: **07034506** EAN: **8422248095570**

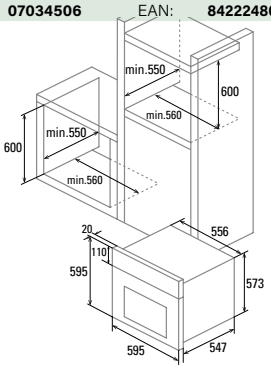

ME 7207 BK
Cod.: **07034404** EAN: **8422248081849**

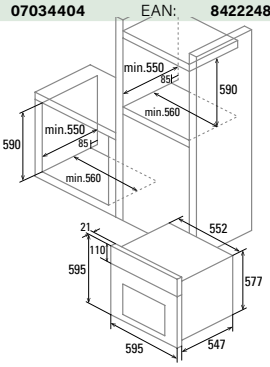

MDS 7205 X
Cod.: **07034601** EAN: **8422248095457**

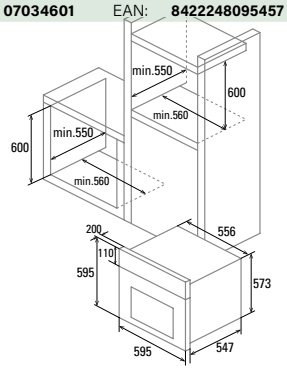

MES 7106 X
Cod.: **07044606** EAN: **8422248095440**

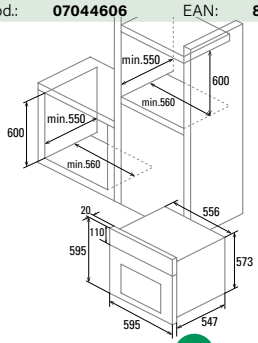

ME 6206 X
Cod.: **07007303** EAN: **8422248075886**

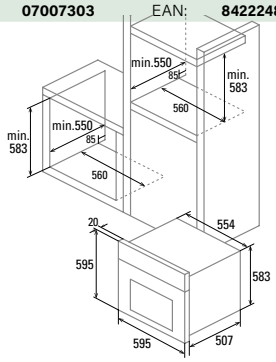

SES 7104 X
Cod.: **07044605** EAN: **8422248095433**

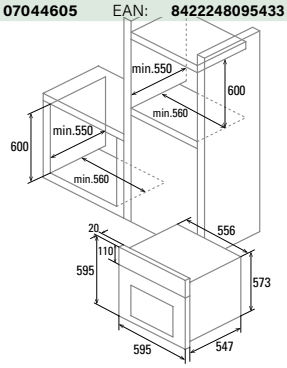

SES 7104 WH
Cod.: **07044101** EAN: **8422248095549**

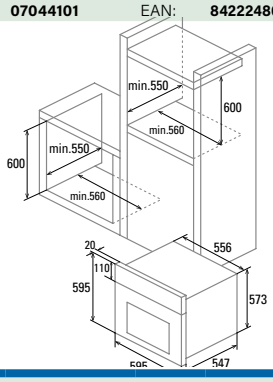

SE 6204 X
Cod.: **07044600** EAN: **8422248075831**

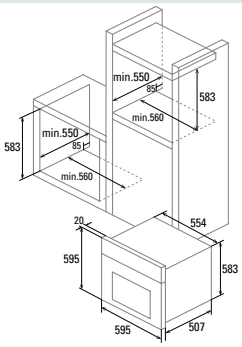

SES 7004 X
Cod.: **07044603** EAN: **8422248095426**

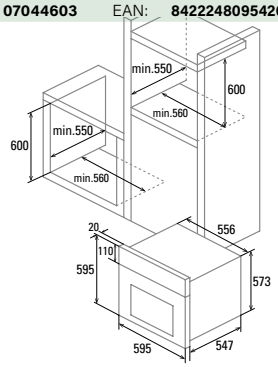

SES 7004 BK
Cod.: **07044408** EAN: **8422248095532**

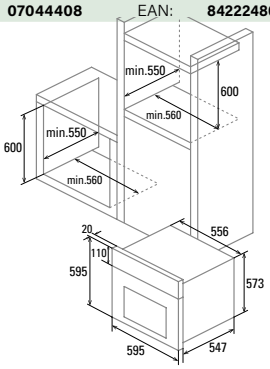

SES 7004 WH
Cod.: **07044100** EAN: **8422248095525**

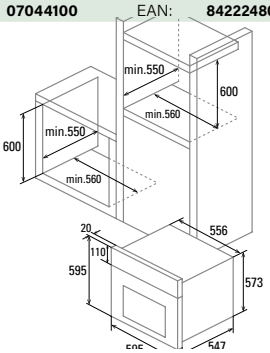

MRA 7108 BK
Cod.: **07035409** EAN: **8422248077026**

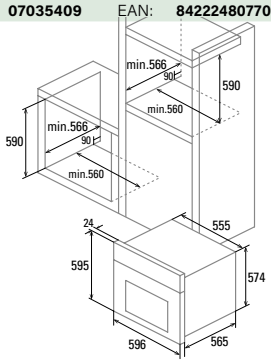

MRA 7108 WH
Cod.: **07035009** EAN: **8422248077033**

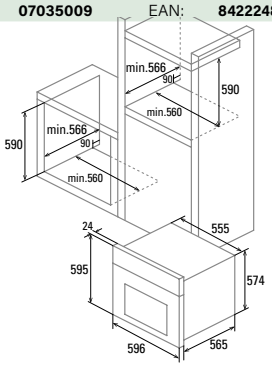

CMD 5008 X
Cod.: **07003307** EAN: **8422248067881**

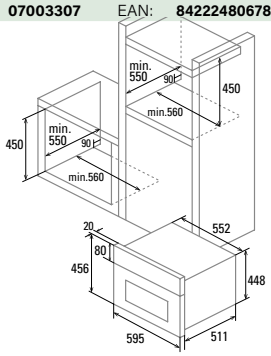

MD 5008 WH
Cod.: **07003000** EAN: **8422248067898**

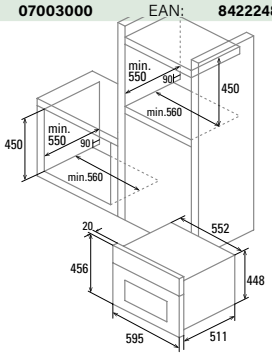

ME 4006X
Cod.: **07003305** EAN: **8422248067867**

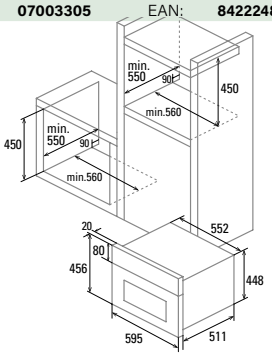

CMD 9208 BK
Cod.: **07039305** EAN: **8422248093156**

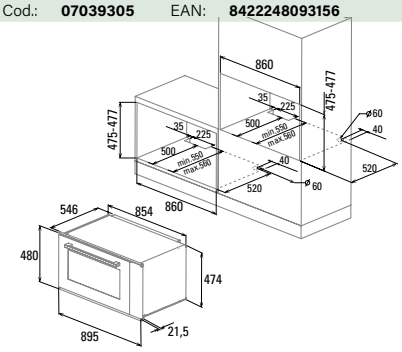

CM 760 AS BK
Cod.: **07032307** EAN: **8422248059497**

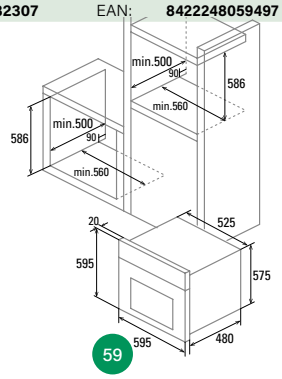

CM 760 AS WH
Cod.: **07032002** EAN: **8422248058568**

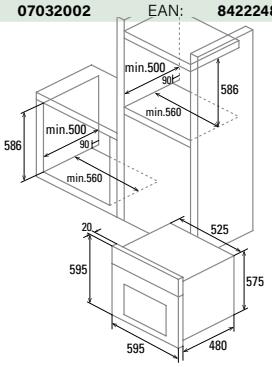

CDP 780 AS BK
Cod.: **07001401** EAN: **8422248059503**

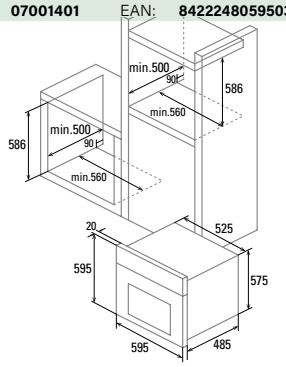

MC 25 GTC BK
Cod.: **07510400** EAN: **8422248055277**

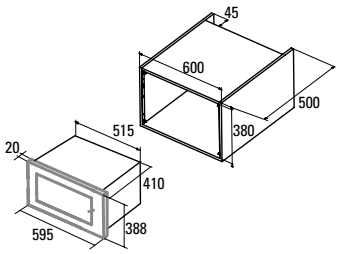

MC 25 GTC WH
Cod.: **07510000** EAN: **8422248055260**

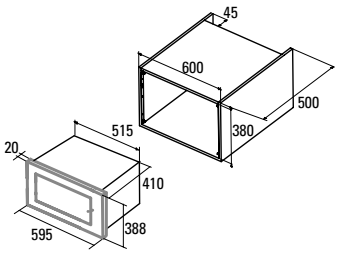

MC 32 DC
Cod.: **07510303** EAN: **8422248055253**

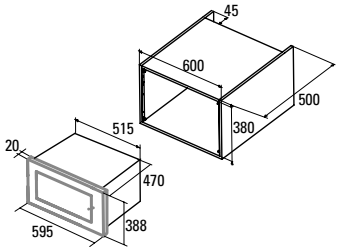

MC 25 D ENC
Cod.: **07510300** EAN: **8422248048453**

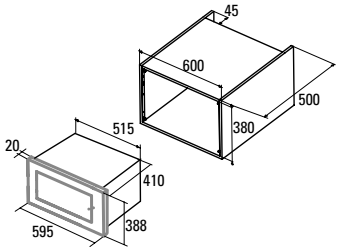

MMA 20 WH
Cod.: **07510003** EAN: **8422248077187**

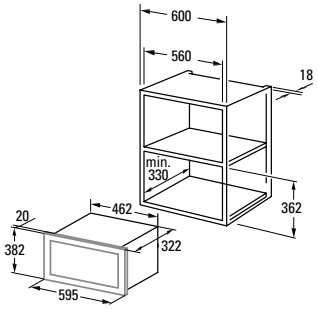

MMA 20 X
Cod.: **07510308** EAN: **8422248077170**

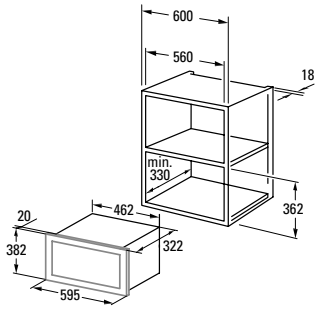

MC 20 D ENC
Cod.: **07510301** EAN: **8422248049450**

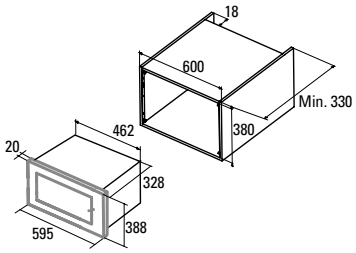

MC 20 IX
Cod.: **07510306** EAN: **8422248058476**

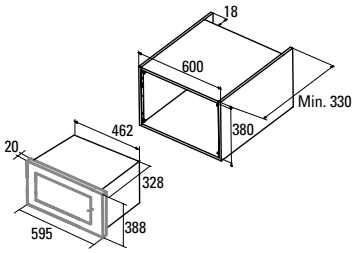

MW BI2505DCG WH
Cod.: **07511002** EAN: **8422248100144**

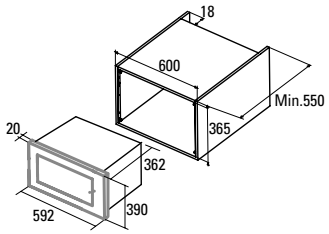

MW BI2505DCG BK
Cod.: **07511402** EAN: **8422248100151**

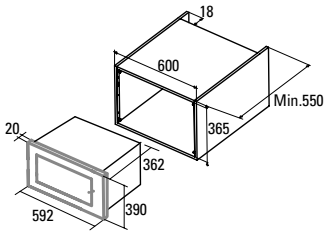

MW BI2005DCG WH
Cod.: **07510007** EAN: **8422248099677**

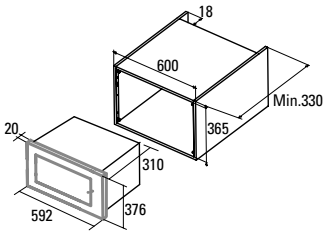

MW BI2005DCG BK
Cod.: **07511401** EAN: **8422248100137**

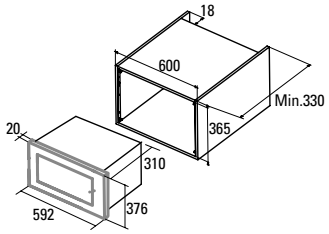

MW BI2001DCG SS
Cod.: **07510309** EAN: **8422248099684**

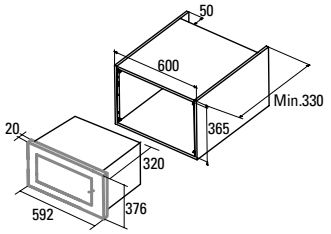

MW BI2000MG SS
Cod.: **07511305** EAN: **8422248099998**

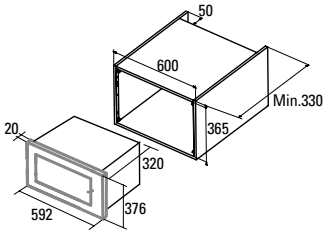

ROCOOK INDUCTION BK
Cod.: **08003400** EAN: **8422248068307**

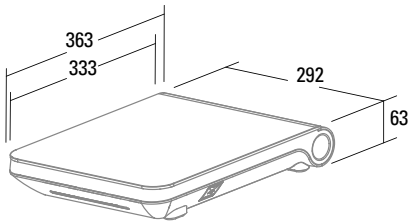

ROCOOK INDUCTION GR
Cod.: **08003300** EAN: **8422248069458**

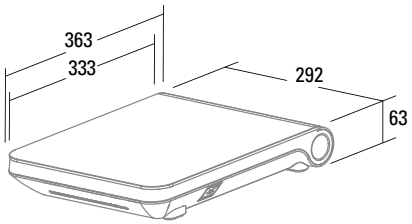

ROCOOK ESSENTIAL KIT ES BK
Cod.: **08007401** EAN: **8422248070522**

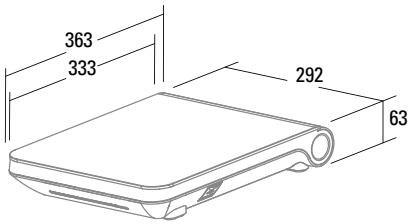

IDF 9012 PRO BK
Cod.: **08024202** EAN: **8422248079631**

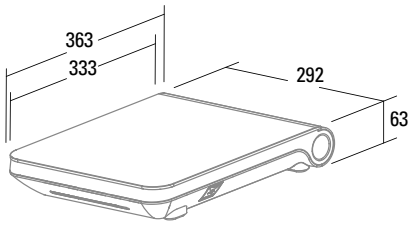

IDF 8021 PRO BK
Cod.: **08081206** EAN: **8422248079648**

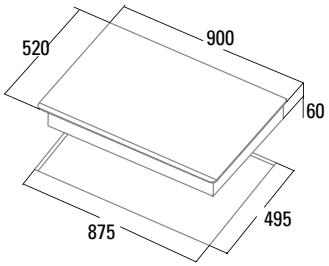

IDB 6003 PRO BK
Cod.: **08063102** EAN: **8422248077675**

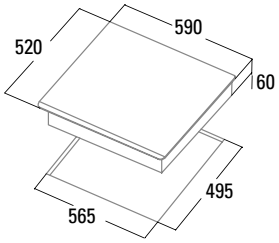

GIGA 750 BK
Cod.: **08026001** EAN: **8422248054485**

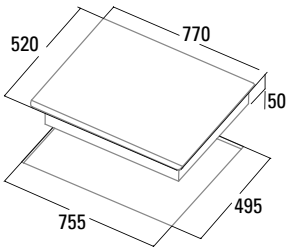

GIGA 600 BK
Cod.: **08026002** EAN: **8422248059190**

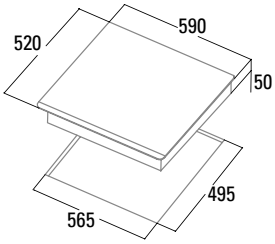

GIGA 600 WH
Cod.: **08026003** EAN: **8422248059206**

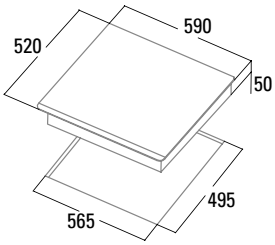

GIGA 600 SD
Cod.: **08026609** EAN: **8422248069014**

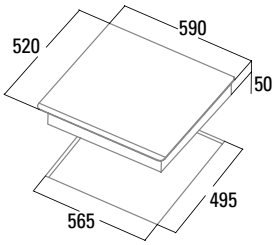

AS 750
Cod.: **08000400** EAN: **8422248078283**

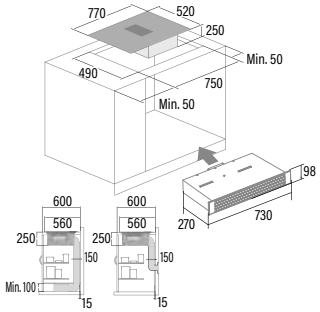

IAS 770
Cod. : **08000403** EAN : **8422248102568**

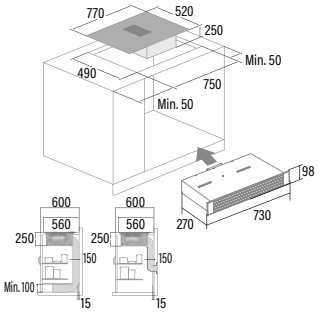

INSB 9012 BK
Cod.: **08024401** EAN: **8422248082037**

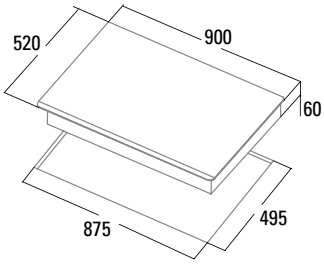

INSB 8021 BK
Cod.: **08081400** EAN: **8422248082020**

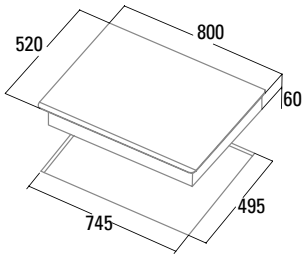

INSB 6032 BK
Cod.: **08063400** EAN: **8422248093972**

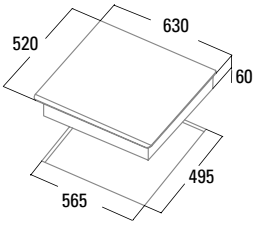

INSB 6030 WH
Cod.: **08053000** EAN: **8422248108607**

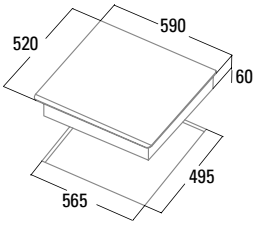

INSB 6028 BK
Cod.: **08063500** EAN: **8422248108577**

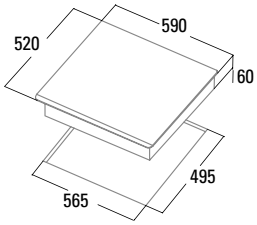

INSB 6003 BK
Cod.: **08063103** EAN: **8422248079518**

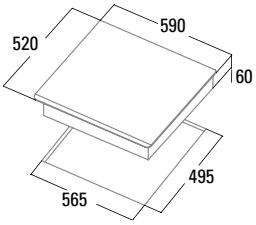

INSB 6003 WH
Cod.: **08053001** EAN: **8422248108614**

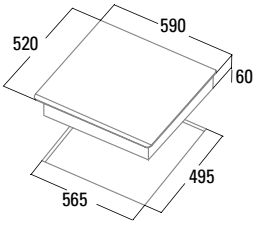

IB 6303 BK
Cod.: **08063101** EAN: **8422248077668**

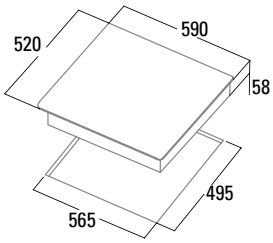

IB 6304 BK
Cod.: **08040102** EAN: **8422248077644**

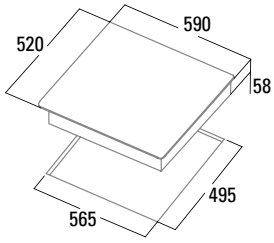

IB 753 BK
Cod.: **08081202** EAN: **8422248054478**

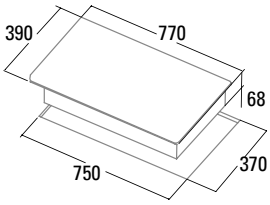

IB 2 PLUS BK
Cod.: **08027203** EAN: **8422248055864**

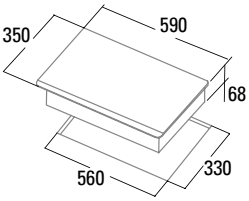

ISB 3102 BK
Cod.: **08003401** EAN: **8422248102469**

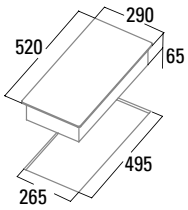

IB 073 BK
Cod.: **08081100** EAN: **8422248075473**

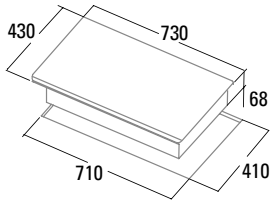

IB 772
Cod.: **08027205** EAN: **8422248060189**

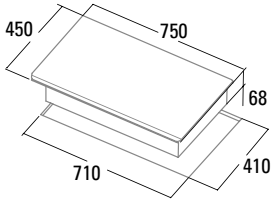

IB 0772 BK
Cod.: **08027100** EAN: **8422248075480**

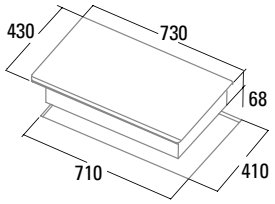

IT 773
Cod.: **08062205** EAN: **8422248060196**

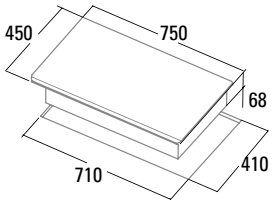

IT 7002 BK
Cod.: **08079202** EAN: **8422248073592**

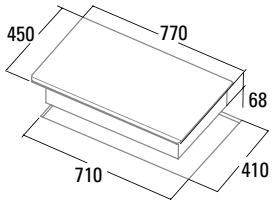

I 3002 HVI BK
Cod.: **08003402** EAN: **8422248104975**

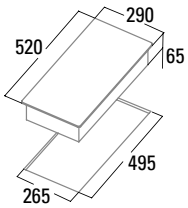

TN 604
Cod.: **08040010** EAN: **8422248058285**

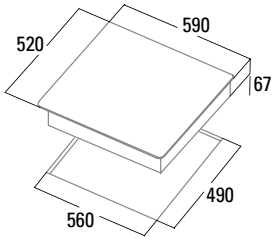

604 HVI
Cod.: **08072201** EAN: **8422248108522**

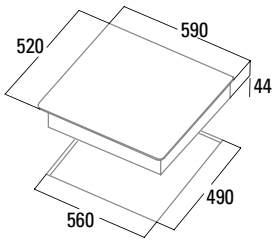

TT 603
Cod.: **08063107** EAN: **8422248082525**

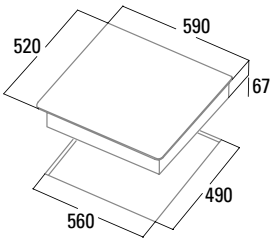

TD 6003 BK
Cod.: **08063403** EAN: **8422248094207**

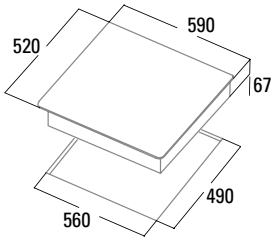

TT 5003
Cod.: **08077000** EAN: **8422248074162**

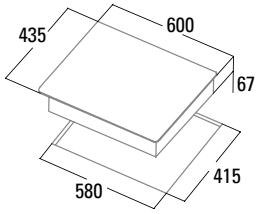

TD 3002 BK
Cod.: **08060403** EAN: **8422248108539**

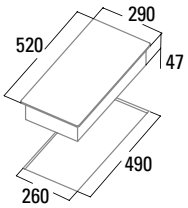

VI 302
Cod.: **08049006** EAN: **8422248108515**

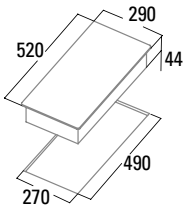

LCI 9041 BK
Cod.: **08005404** EAN: **8422248081924**

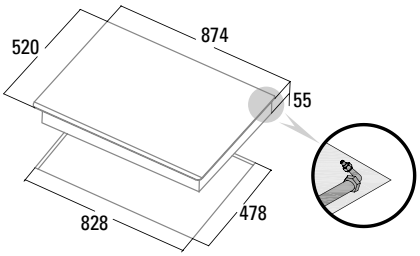

L-7005 CI
Cod.: **08046410** EAN: **8422248081962**

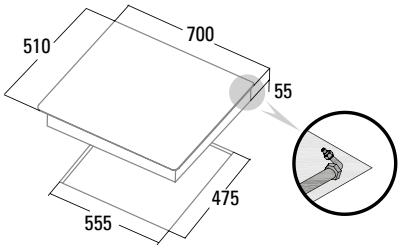

LCI 6031 WH
Cod.: **08041100** EAN: **8422248072557**

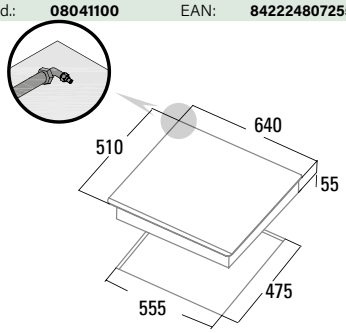

LCI 6031 BK
Cod.: **08041500** EAN: **8422248072724**

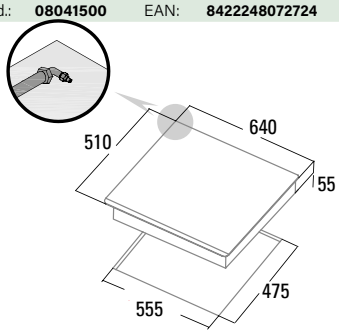

LCIB 6031 BK
Cod.: **08041503** EAN: **8422248078788**

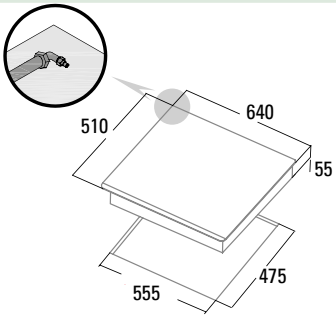

CCI 6031 BK
Cod.: **08041501** EAN: **8422248073691**

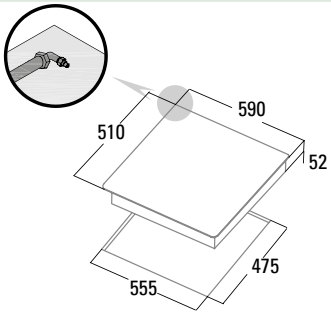

CI 631 BK
Cod.: **08041412** EAN: **8422248058681**

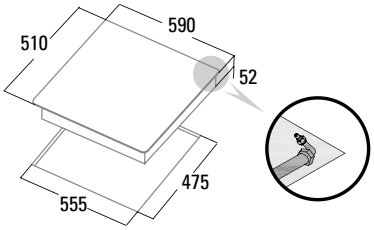

CIB 6031 BK
Cod.: **08068400** EAN: **8422248068352**

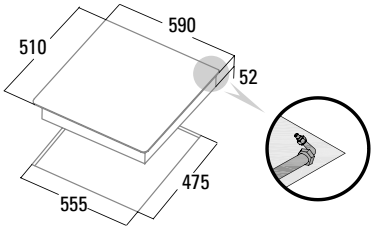

LCI 6021 BK
Cod.: **08068401** EAN: **8422248068376**

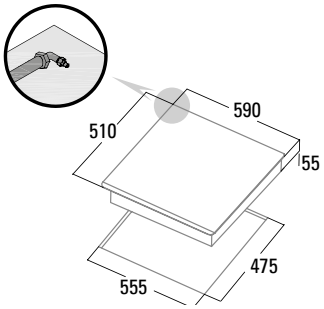

LCIB 6021 BK
Cod.: **08068403** EAN: **8422248078795**

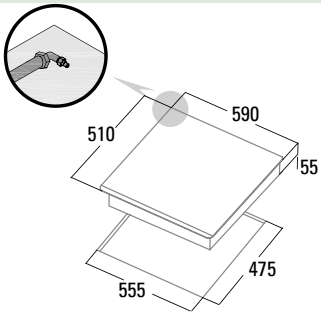

SCI 6021 BK
Cod.: **08068405** EAN: **8422248086929**

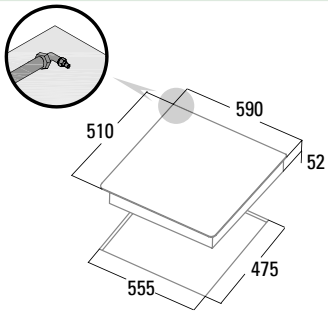

CCI 6021 BK
Cod.: **08068501** EAN: **8422248073707**

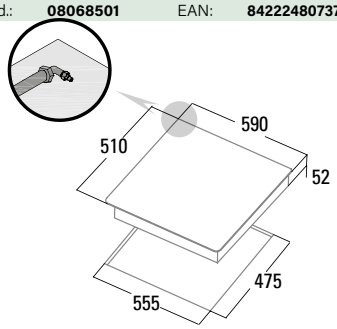

CI 6021 BK
Cod.: **08068309** EAN: **8422248067355**

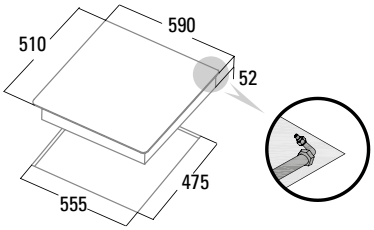

CIB 6021 BK
Cod.: **08068402** EAN: **8422248073677**

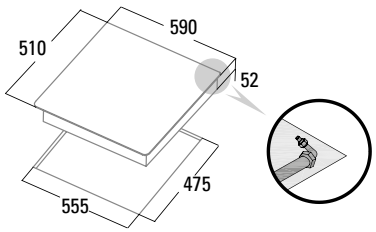

CCI 5003 BK
Cod.: **08041505** EAN: **8422248094269**

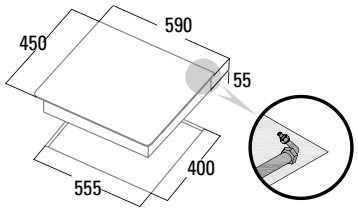

SCI 3002 BK
Cod.: **08047410** EAN: **8422248093743**

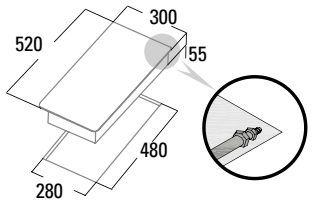

RCI 631 BK
Cod.: **08028403** EAN: **8422248055024**

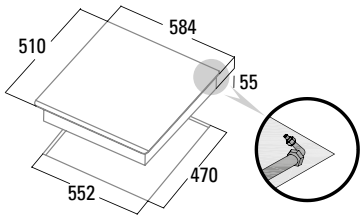

LGI 9041 X
Cod.: **08005350** EAN: **8422248081948**

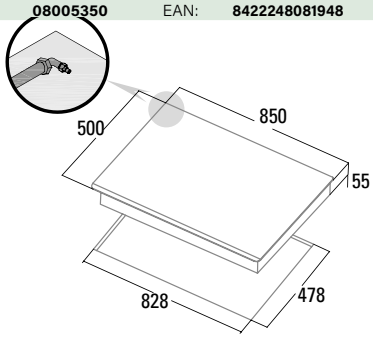

LGI 7041 X
Cod.: **08045302** EAN: **8422248074612**

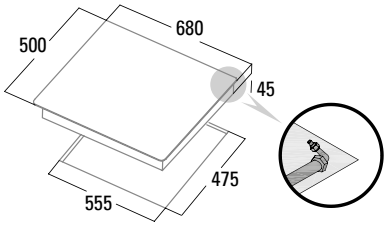

LGD 631 X
Cod.: **08066002** EAN: **8422248058735**

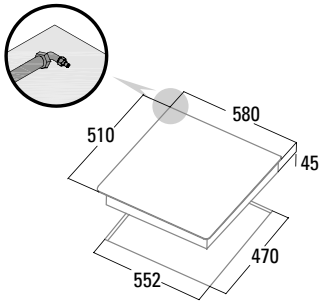

GI 6031 X
Cod.: **08066011** EAN: **8422248067331**

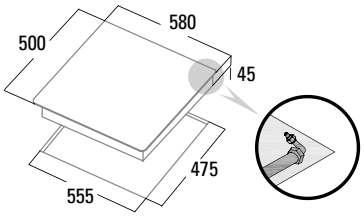

GI 6004 X
Cod.: **08066600** EAN: **8422248067775**

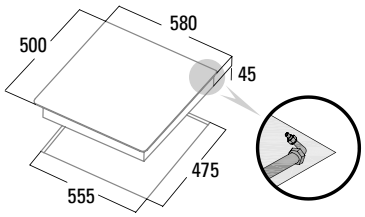

GIB 6004 X
Cod.: **08066312** EAN: **8422248068369**

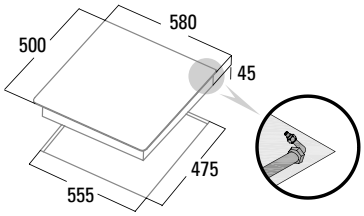

GI 6021 X
Cod.: **08068308** EAN: **8422248067348**

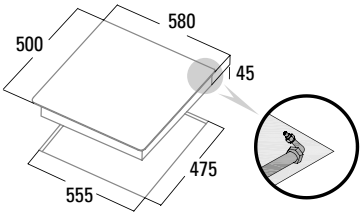

GIB 6021 X
Cod.: **08068310** EAN: **8422248073684**

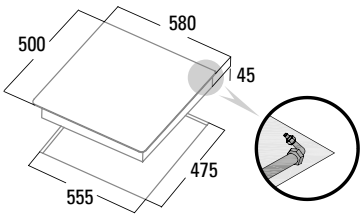

GI 3002 X
Cod.: **08039600** EAN: **8422248108829**

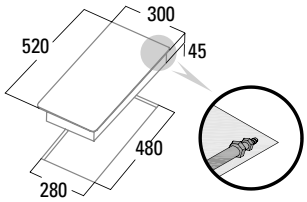

SET NEW YORK
Cod.: **03000005** EAN: **8422248080583**

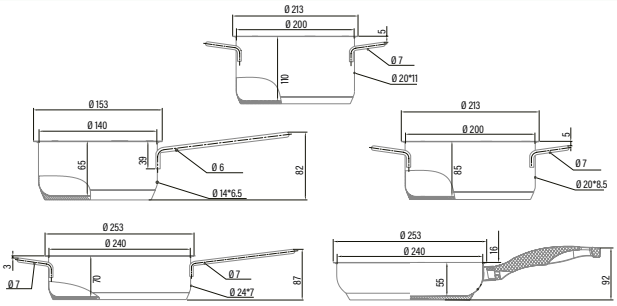

SET PROFESSIONAL
Cod.: **03000006** EAN: **8422248085885**

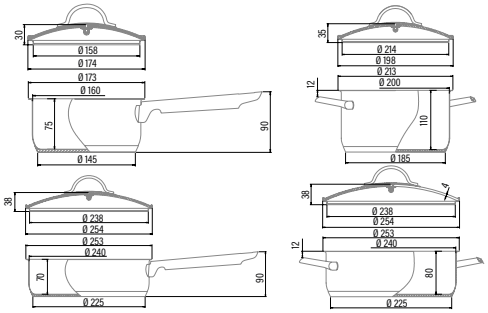

CAST IRON GRILL
Cod.: **03017400** EAN: **8422248082563**

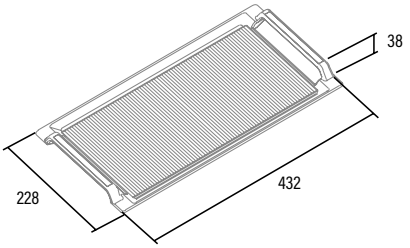

LVI 61014
Cod.: **07200005** EAN: **8422248096812**

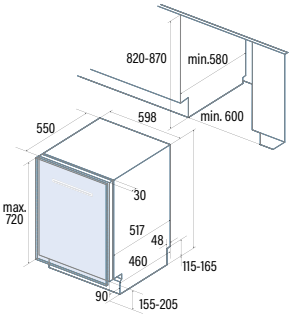

LVI 46010
Cod.: **07200006** EAN: **8422248096829**

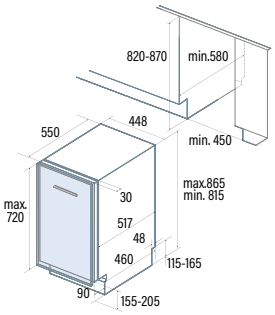

LVI 61013
Cod.: **07200007** EAN: **8422248096836**

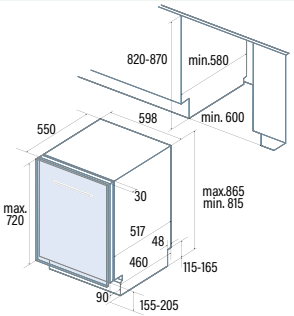

LVI 46009
Cod.: **07200008** EAN: **8422248096843**

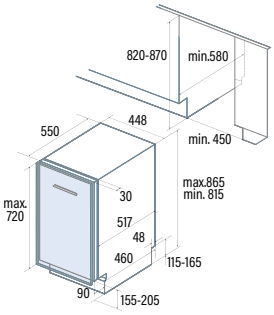

LI 08014
Cod.: **07900002** EAN: **8422248096942**

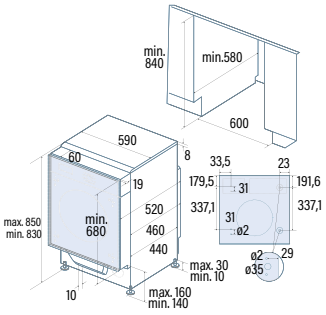

CI-54177 ST
Cod.: **07800010** EAN: **8422248106566**

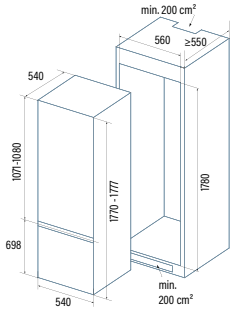

CI-54177 NF
Cod.: **07850003** EAN: **8422248102131**

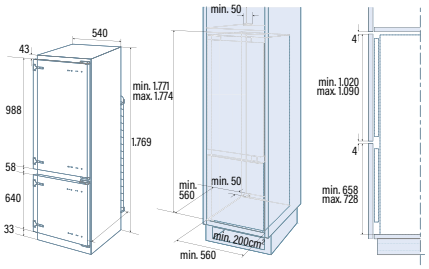

VI 15107 X
Cod.: **07751006** EAN: **8422248101790**

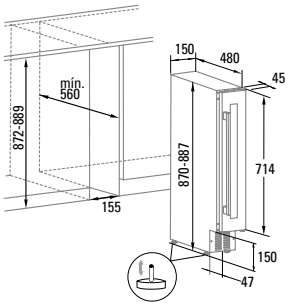

VI 30117 X
Cod.: **07751007** EAN: **8422248101806**

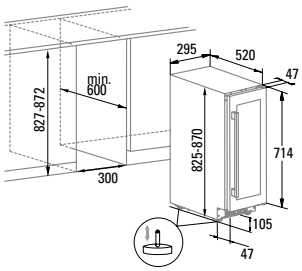

VI 54024 X
Cod.: **07751008** EAN: **8422248101837**

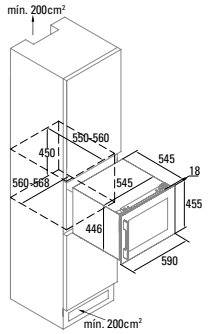

VI 59082 X
Cod.: **07702004** EAN: **8422248098915**

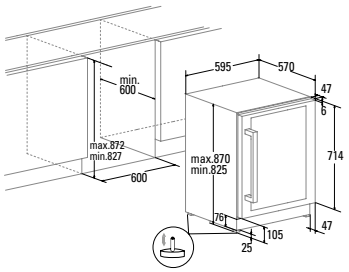

CB 50-40 R10
Cod.: **02625006** EAN: **8422248108652**

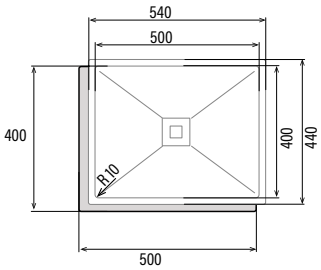

CB 45-40 R10
Cod.: **02621006** EAN: **8422248108645**

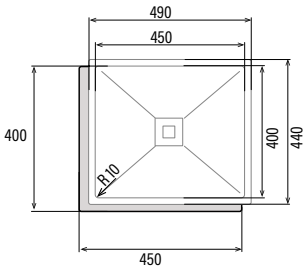

CB 40-40 P R10
Cod.: **02624006** EAN: **8422248108669**

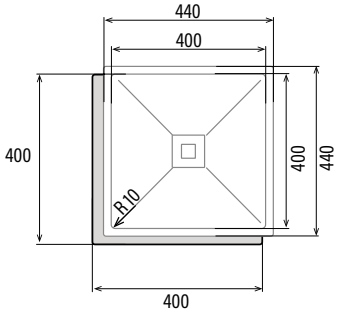

CB 40-40 R10
Cod.: **02624016** EAN: **8422248108638**

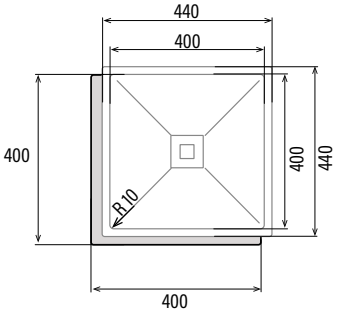

CB-2
Cod.: **02607101** EAN: **8422248074681**

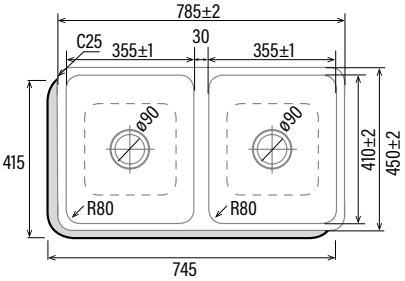

CB 50-40
Cod.: **02625300** EAN: **8422248048743**

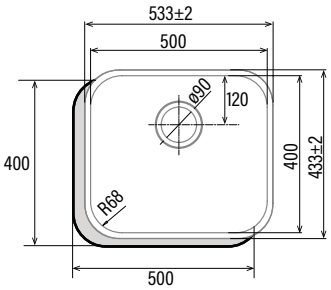

CB 45-40
Cod.: **02621009** EAN: **8422248043175**

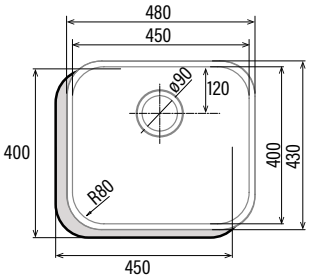

CB 40-40
Cod.: **02624007** EAN: **8422248109000**

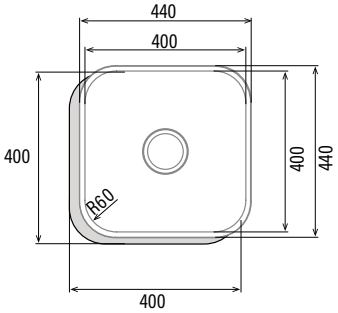

CBP 40-40
Cod.: **02624302** EAN: **8422248109017**

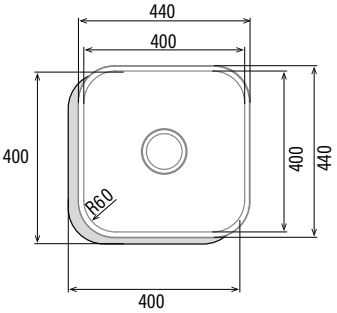

CBS-1 40-40 D R10
Cod.: **02624008** EAN: **8422248109024**

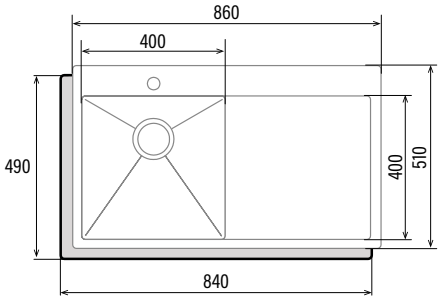

CBS-2 40-40 R10
Cod.: **02624009** EAN: **8422248109031**

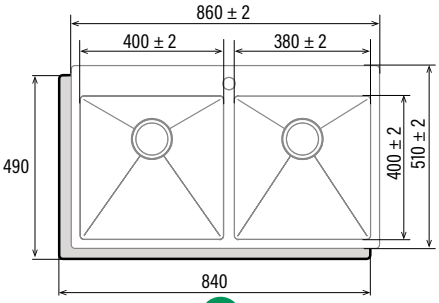

CBS-1 54-40 R10
Cod.: **02624010** EAN: **8422248109048**

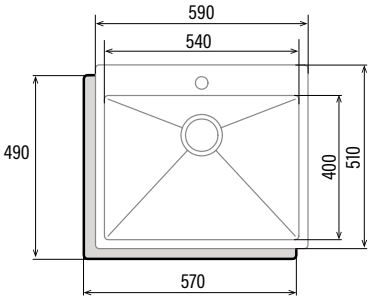

CDL-1 EI
Cod.: **02606601** EAN: **8422248108911**

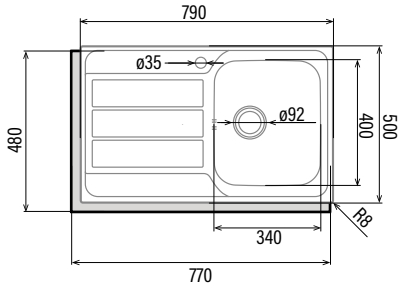

CDL-1 ED
Cod.: **02606602** EAN: **8422248108928**

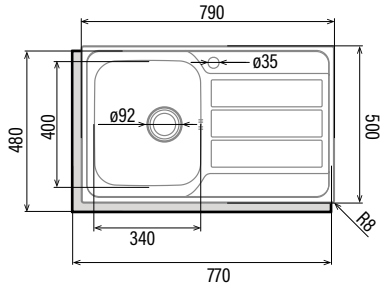

CDP-1 EI
Cod.: **02606501** EAN: **8422248108942**

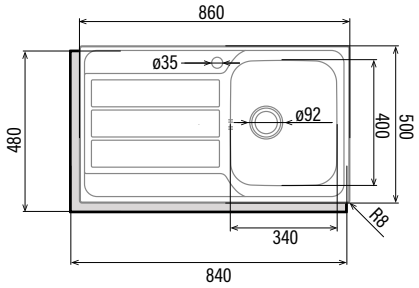

CDP-1 ED
Cod.: **02606502** EAN: **8422248108959**

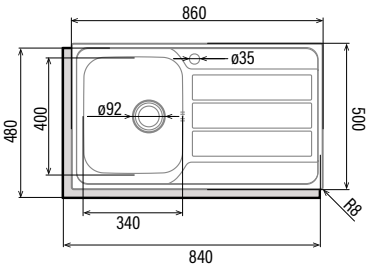

RD-1 EI
Cod.: **02603302** EAN: **8422248109109**

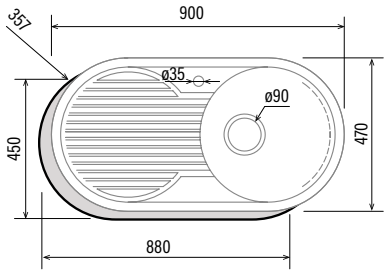

RD-1 ED
Cod.: **02603303** EAN: **8422248109123**

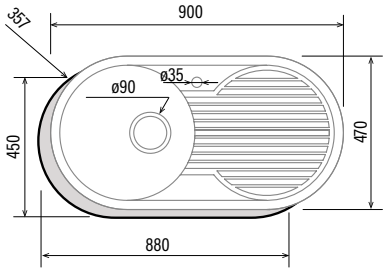

CDS-1 EI
Cod.: **02606401** EAN: **8422248108973**

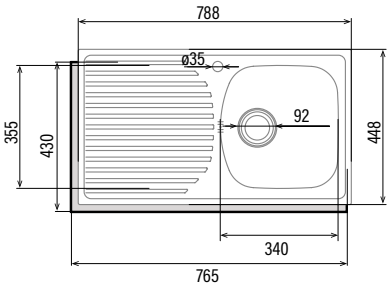

CDS-1 ED
Cod.: **02606402** EAN: **8422248108980**

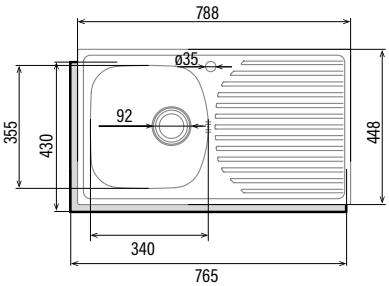

C-2 AG
Cod.: **02607102** EAN: **8422248109055**

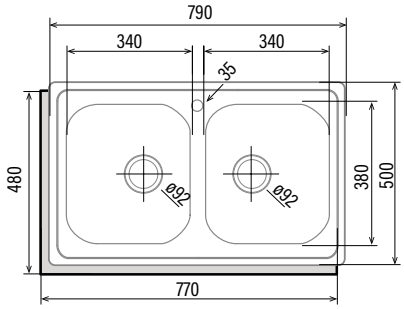

R-2 AG
Cod.: **02604209** EAN: **8422248043151**

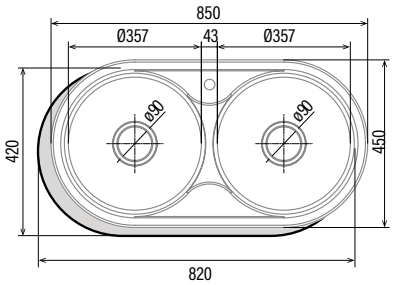

CSS60-1
Cod.: **02612300** EAN: **8422248074377**

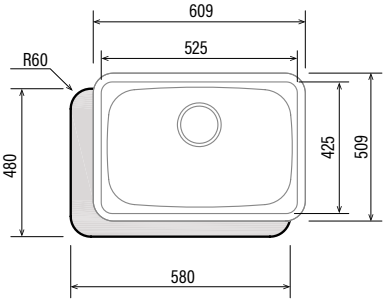

CSS-1
Cod.: **02612400** EAN: **8422248074384**

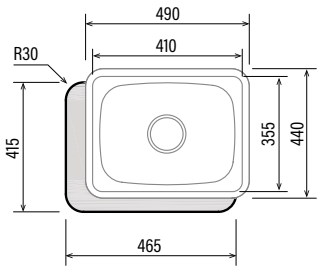

CS-1
Cod.: **02612101** EAN: **8422248055338**

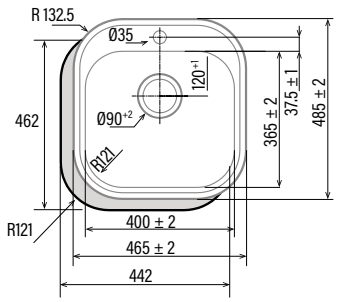

RS-1
Cod.: **02602100** EAN: **8422248108997**

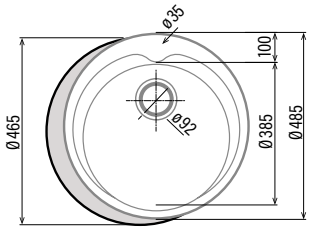

CPA
Cod.: **02507400** EAN: **8422248107938**

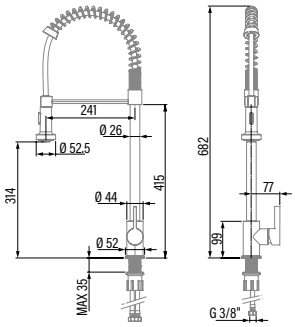

CPB
Cod.: **02506400** EAN: **8422248107914**

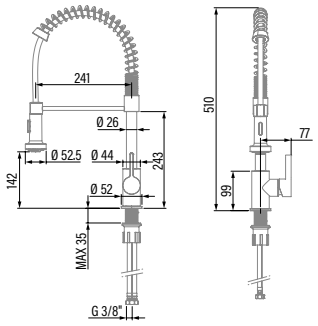

XPB
Cod.: **02506300** EAN: **8422248107921**

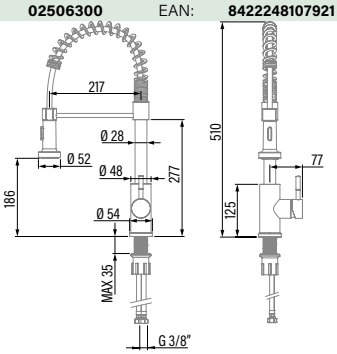

XSE
Cod.: **02500301** EAN: **8422248107907**

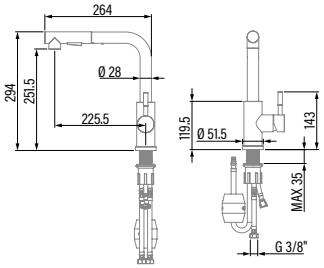

CSE
Cod.: **02500401** EAN: **8422248107891**

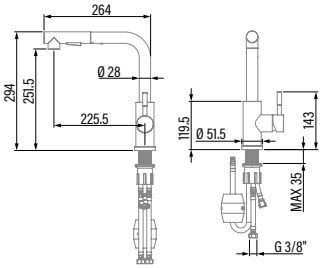

CSA
Cod.: **02500400** EAN: **8422248107884**

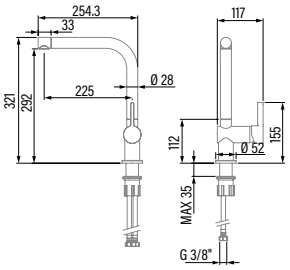

CMA
Cod.: **02503400** EAN: **8422248107877**

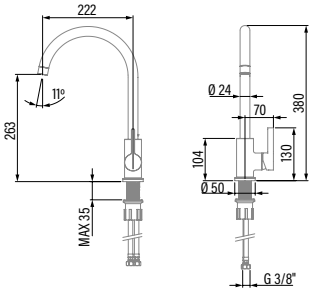

CBA
Cod.: **02502400** EAN: **8422248107860**

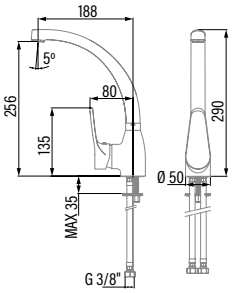

CBB
Cod.: **02501400** EAN: **8422248107778**

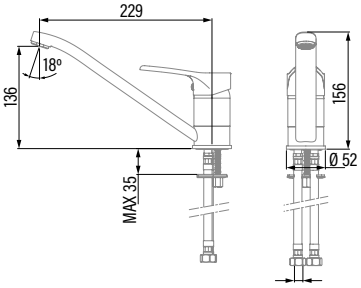

E-100 GTH
Cod.: **00900200** EAN: **8422248049634**

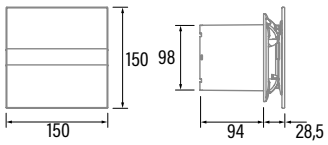

E-120 GTH
Cod.: **00901200** EAN: **8422248056823**

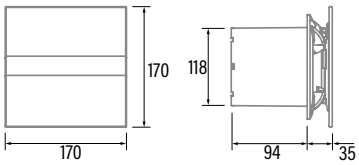

E-150 GTH
Cod.: **00902200** EAN: **8422248056854**

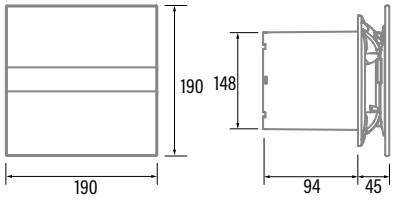

E-100 GTH BK
Cod.: **00900602** EAN: **8422248071895**

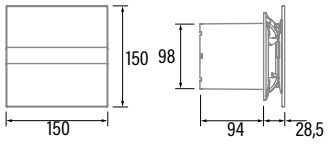

E-100 GT
Cod.: **00900100** EAN: **8422248049627**

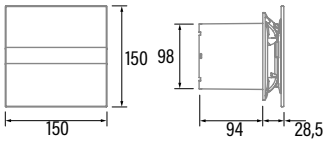

E-120 GT
Cod.: **00901100** EAN: **8422248056816**

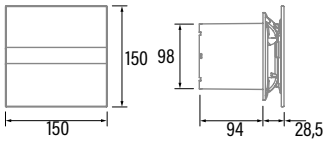

E-100 GST
Cod.: **00900500** EAN: **8422248056069**

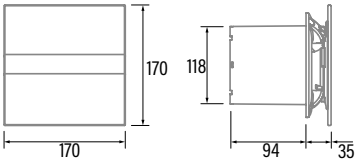

E-100 GT BK
Cod.: **00900502** EAN: **8422248071888**

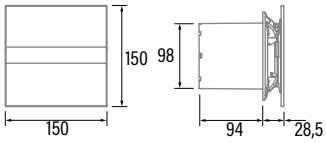

E-100 GLT
Cod.: **00900001** EAN: **8422248056786**

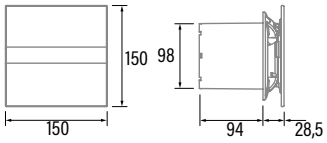

E-100 G
Cod.: **00900000** EAN: **8422248049610**

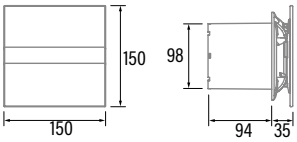

E-100 GS
Cod.: **00900400** EAN: **8422248056052**

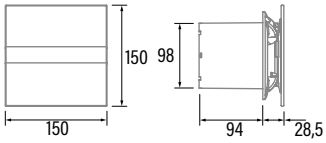

E-100 G BK
Cod.: **00900402** EAN: **8422248071871**

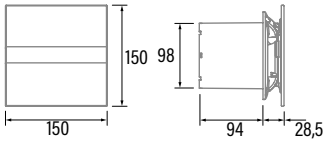

E-120 G
Cod.: **00901000** EAN: **8422248056809**

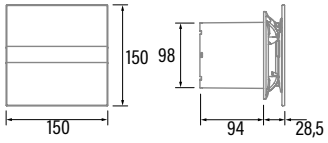

E-150 G
Cod.: **00902000** EAN: **8422248056830**

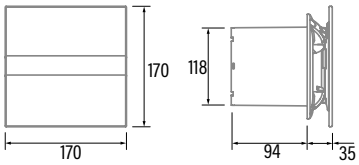

UC-10 HYGRO
Cod.: **01200200** EAN: **8422248079860**

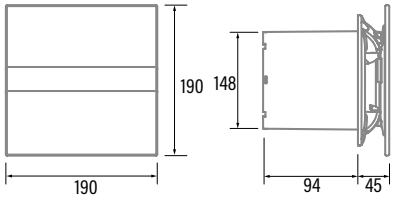

UC-10 HYGRO SILVER
Cod.: **01201200** EAN: **8422248082594**

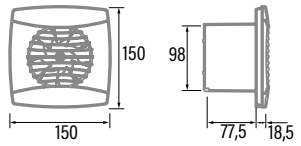

UC-10 HYGRO BLACK
Cod.: **01202200** EAN: **8422248082624**

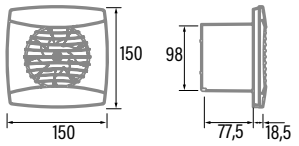

UC-10 TIMER
Cod.: **01200100** EAN: **8422248079853**

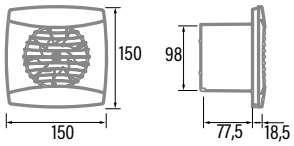

UC-10 TIMER SILVER
Cod.: **01201000** EAN: **8422248082587**

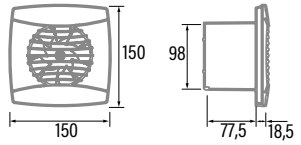

UC-10 STD
Cod.: **01200000** EAN: **8422248079846**

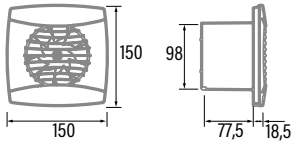

X-MART 10 MATIC T
Cod.: **01016000** EAN: **8422248003551**

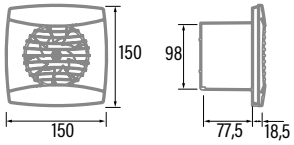

X-MART 10 MATIC
Cod.: **01015000** EAN: **8422248003544**

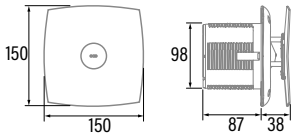

X-MART 12 MATIC
Cod.: **01025000** EAN: **8422248003575**

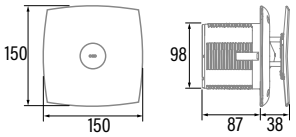

X-MART 15 MATIC
Cod.: **01035000** EAN: **8422248003605**

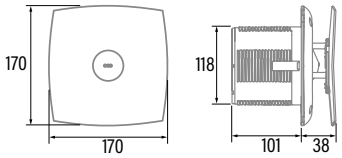

X-MART 10 MATIC INOX
Cod.: **01045000** EAN: **8422248003728**

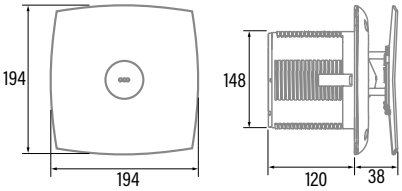

B-10 MATIC-TIMER
Cod.: **00916000** EAN: **8422248110303**

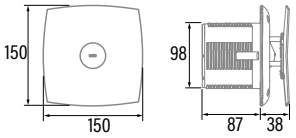

B-10 MATIC
Cod.: **00915000** EAN: **8422248110204**

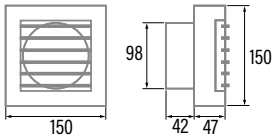

B-15 MATIC
Cod.: **00935000** EAN: **8422248111102**

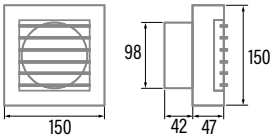

X-MART 10 INOX H
Cod.: **01044000** EAN: **8422248003650**

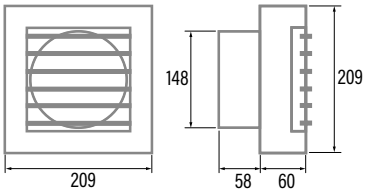

X-MART 10 TIMER
Cod.: **01011000** EAN: **8422248003414**

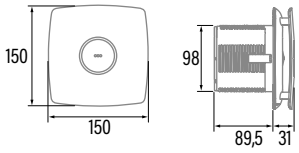

X-MART 10 STD
Cod.: **01010000** EAN: **8422248003384**

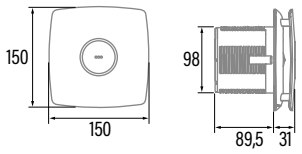

X-MART 12 STD
Cod.: **01020000** EAN: **8422248003391**

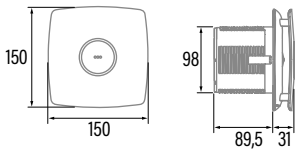

X-MART 15 STD
Cod.: **01030000** EAN: **8422248003407**

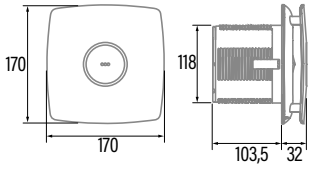

X-MART 10 INOX
Cod.: **01040000** EAN: **8422248003636**

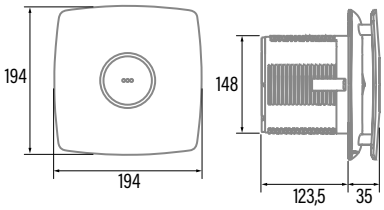

X-MART 12 INOX
Cod.: **01050000** EAN: **8422248003667**

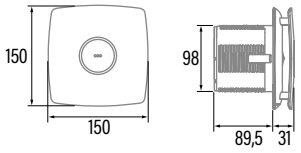

X-MART 15 INOX
Cod.: **01060000** EAN: **8422248003698**

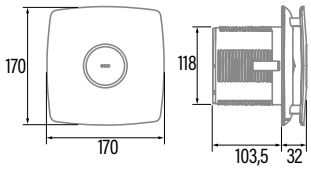

SILENTIS LN 10 T
Cod.: **01073000** EAN: **8422248070379**

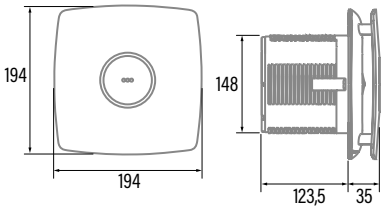

SILENTIS LN 10
Cod.: **01072000** EAN: **8422248070355**

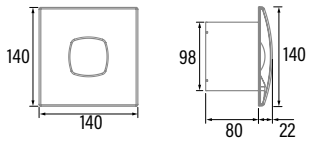

SILENTIS LN 10 INOX
Cod.: **01072300** EAN: **8422248070362**

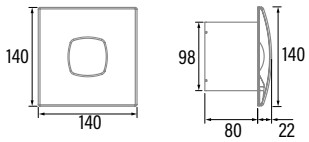

SILENTIS 12
Cod.: **01080000** EAN: **8422248016971**

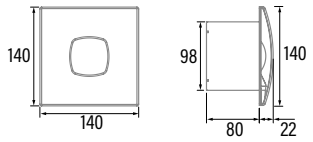

SILENTIS 12 INOX
Cod.: **01080300** EAN: **8422248016995**

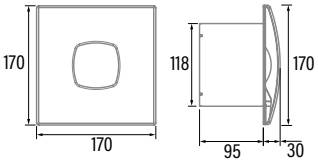

SILENTIS 15
Cod.: **01090000** EAN: **8422248017015**

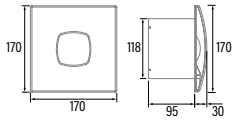

B-10 PLUS TIMER
Cod.: **00981101** EAN: **8422248049566**

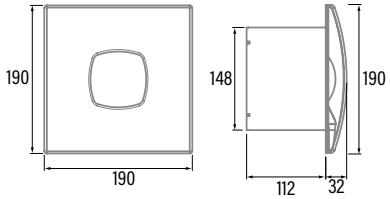

B-12 PLUS TIMER
Cod.: **00982100** EAN: **8422248113489**

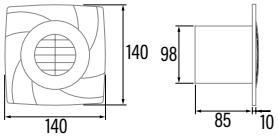

B-8 PLUS
Cod.: **00990000** EAN: **8422248113168**

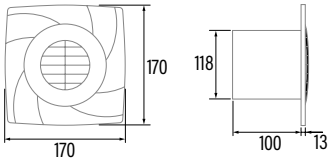

B-10 PLUS
Cod.: **00281000** EAN: **8422248047210**

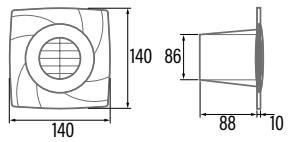

B-12 PLUS
Cod.: **00282000** EAN: **8422248053969**

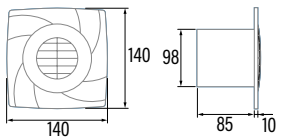

B-15 PLUS
Cod.: **00983000** EAN: **8422248114226**

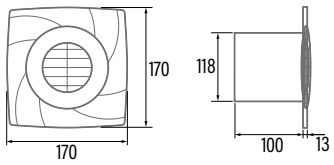

B-10 TIMER
Cod.: **00911000** EAN: **8422248110105**

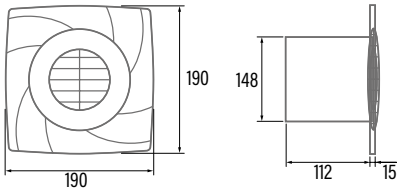

B-10
Cod.: **00910000** EAN: **8422248110006**

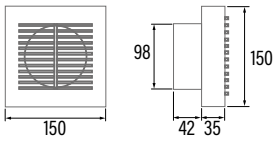

B-12
Cod.: **00920000** EAN: **8422248110501**

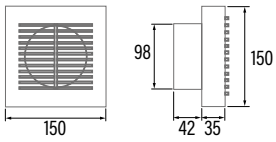

B-15
Cod.: **00930000** EAN: **8422248110907**

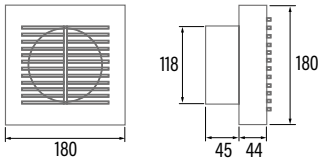

DUCT IN LINE 100/130
Cod.: **00770000** EAN: **8422248920735**

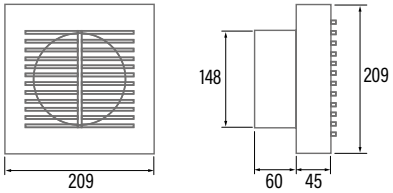

DUCT IN-LINE 100/270
Cod.: **00702000** EAN: **8422248021203**

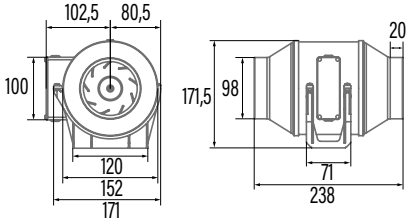

DUCT IN-LINE 125/320
Cod.: **00703000** EAN: **8422248021227**

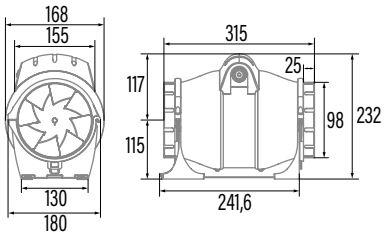

DUCT IN-LINE 150/560
Cod.: **00704000** EAN: **8422248021241**

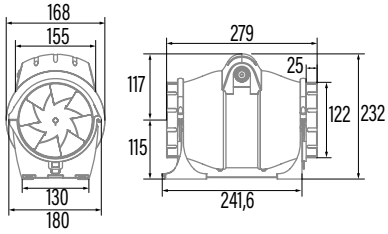

DUCT IN-LINE 160/560
Cod.: **00705000** EAN: **8422248021265**

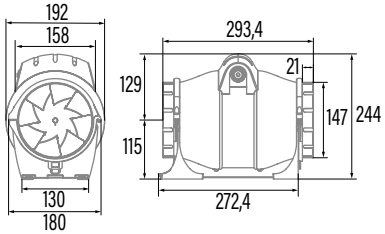

DUCT IN-LINE 200/910
Cod.: **00706000** EAN: **8422248021289**

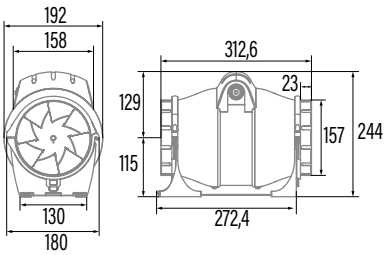

MT-100
Cod.: **00710000** EAN: **8422248920186**

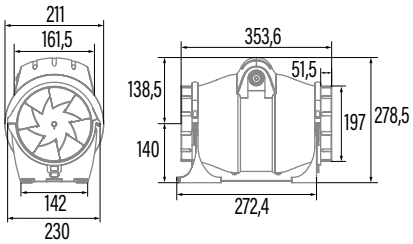

MT-125
Cod.: **00720000** EAN: **8422248920520**

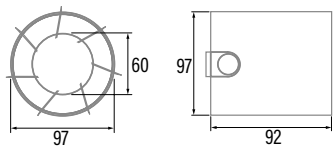

MT-150
Cod.: **00730000** EAN: **8422248920797**

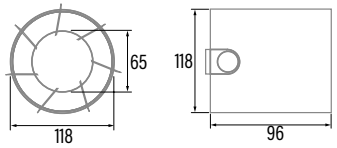

LHV 160
Cod.: **00660000** EAN: **8422248009324**

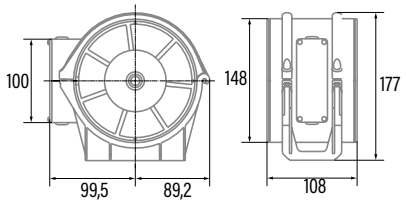

LHV 190
Cod.: **00661000** EAN: **8422248009331**

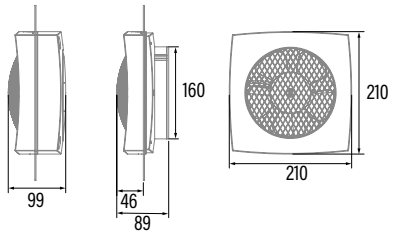

LHV 225
Cod.: **00662000** EAN: **8422248009348**

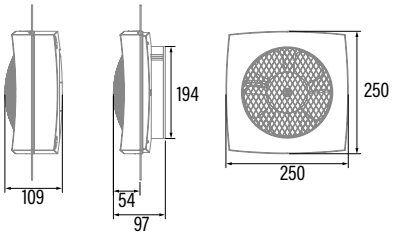

LHV 300
Cod.: **00663000** EAN: **8422248009355**

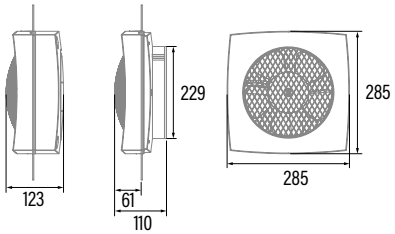

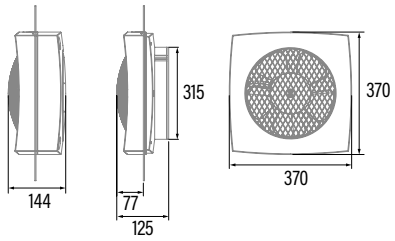

CTRS-100 REV SLIM
Cod.: **03114001** EAN: **8422248102520**

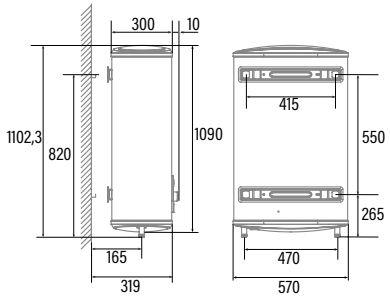

CTRS-80 REV SLIM
Cod.: **03112001** EAN: **8422248081474**

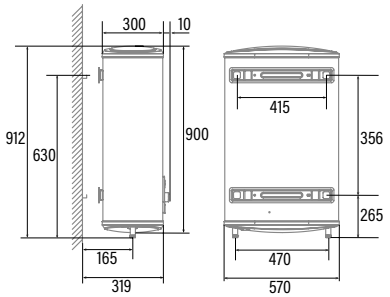

CTRS-50 REV SLIM
Cod.: **03111001** EAN: **8422248081467**

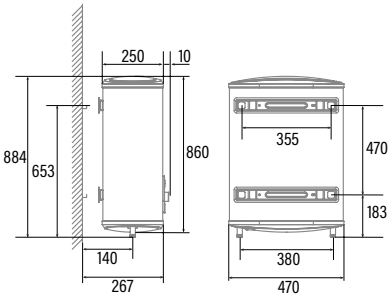

CTRH-80-REV
Cod.: **03112004** EAN: **8422248081580**

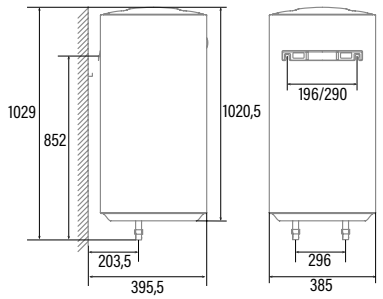

CTRH-50-REV
Cod.: **03111004** EAN: **8422248081573**

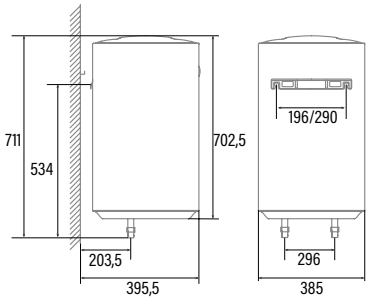

CTR-100-M
Cod.: **03113001** EAN: **8422248081559**

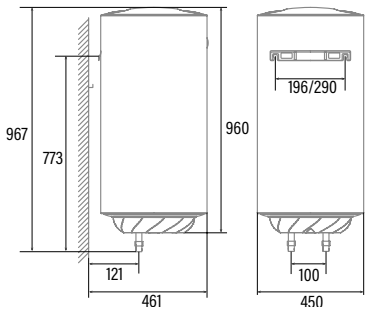

CTR-80-M
Cod.: **03112003** EAN: **8422248081542**

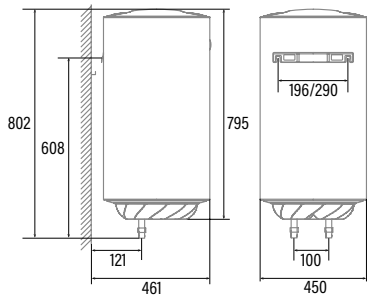

CTR-50-M
Cod.: **03111003** EAN: **8422248081535**

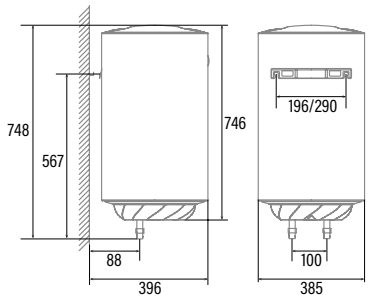

CTR-30-M
Cod.: **03110001** EAN: **8422248081528**

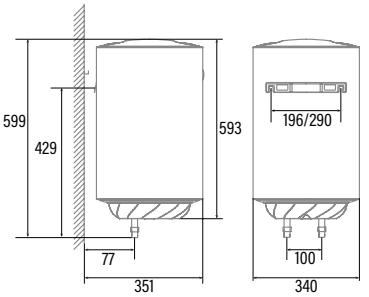

CTRC-30-M
Cod.: **03110003** EAN: **8422248096621**

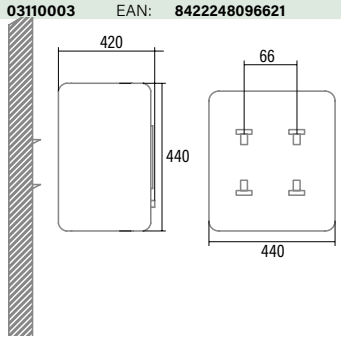

CTRC-15-M
Cod.: **03109000** EAN: **8422248096638**

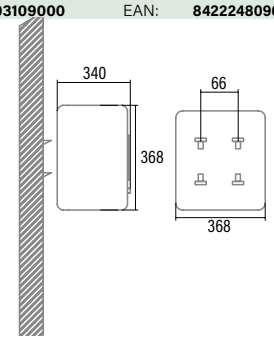

Code	08000400	08000403	02119207	02119203	02119101	02111306	02111307	02111002
EAN	8422248078283	8422248102568	8422248069342	8422248062084	8422248074230	8422248094313	8422248094337	8422248097437
Model	AS 750 2 flex induction	IAS 770	ISLA MAGRABA	ISLA MOON	ISLA FARO X	ISLA BENNU SLIM 900 X	ISLA BENNU SLIM 1200 X	ISLA SIRIN GLASS 1000 GWH
Type	Surface	Surface	Island	Island	Island	Island	Island	Island
Product fiche according to directives EU65/2014 - EN61591, EN60704-2-13, EN50564								
AEC (Anual Energy consumption) (kWh/annum)	38,9	29	97,1	97,1	56,3	44,1	44,1	58,9
EEI class (Energy Efficiency Class)	A	A	C	C	A	B	B	A
FDE (Fluid Dynamic Efficiency)	26,7	27,2	15,7	15,9	30,6	25,2	25,2	31,5
FDE class (Fluid Dynamic Efficiency Class)	A	B	D	D	A	B	B	A
LE (Lighting Efficiency) (lux/W)	0	0	14,3	14,3	36	23,7	23,7	36,6
LE class (Lighting Efficiency Class)	0	0	D	D	A	B	B	A
GFE (Grease Filtering Efficiency)	91,2	45,8	91,2	91,2	91,2	91,2	91,2	91,2
GFE Class (Grease Filtering Efficiency class)	B	F	B	B	B	B	B	B
Air flow at minimum speed (m3/h)	140	198,6	300	300	340	300	300	340
Air flow at maximum speed (m3/h)	450	440,1	645	645	600	500	500	600
Air flow at intensive speed (TURBO) (m3/h)	650	454,2	-	-	800	620	620	850
Sound Power Level at minimum speed (dB)	40	45	48	48	50	50	50	50
Sound Power Level at maximum speed (dB)	64	64	63	63	65	65	65	65
Sound Power Level at intensive speed (TURBO) (dB)	67	67	-	-	67	67	67	67
Po (Power Consumption in off mode) (W)	0,41	0,46	0,26	0,45	0,26	0,3	0,3	0,3
Ps (Power Consumption in standby) (W)	0	0	0	0	0	0	0	0
Integration directive EU 66/2014								
f (Time Increase Factor)	1	1	1,4	1,4	0,9	1,1	1,1	0,9
EEI (Energy Efficiency Index)	54,3	49,2	84,1	84,1	53,7	60,7	60,7	54,6
QBEP (Flow Rate at Best Efficiency Point) (m3/h)	270,7	264,2	385,1	386,4	416,9	326,9	326,9	350,4
PBEP (Static Pressure Difference at Best Efficiency Point) (Pa)	364	294	253	254	411	269,4	269,4	380
WBEP (Electric Power Input at Best Efficiency Point) (W)	102,5	79,4	172,1	171,5	155,7	97,1	97,1	132,8
WL (Nominal Power Consumption of Lighting system) (W)	0	0	10,5	10,5	7	7	7	14
EMIDDLE (Average Illumination of Lighting system on Cooking surface) (lux)	0	0	150	150	252	166	166	513
External Dimensions								
Width (mm)	770	770	650	400	400	860	1160	1000
Depth (mm)	520	520	650	400	400	665	665	600
Total max height(mm	300	285	1700	1700	1090	170	170	500
Total min height(mm	300	-	720	860	700	170	170	285
Outlet Diameter (mm)	150 + 180x90	150	-	-	150/125	180x90	180x90	150
Characteristics								
Motor	BTDCA	BLDC	BT2	BT2	BT3	S6	S6	BT3
Extraction Levels	4+1	5+1	3	3	2 + 1	3+1	3+1	3+1
Motor Maximum Power Consumption	135	135	200	200	280	105	105	280
Maximum Pressure	370	-	400	400	450	370	370	450
Intensive Speed (TURBO) Pressure	470	-	-	-	470	470	470	470
Control Type	TC5i LITE	TC	VL3	TC3V	VL3i	TC4i	Tc4i	TC4i
Automatic shut-down timer	√	√	√	√	√	√	√	√
Electronic Filter Saturation Indicator	√	√	-	√	-	√	√	√
Filter Type	Metallic	Metallic	Metallic	Dual	Metallic	Metallic	Metallic	Metallic
Anti-grease Filter Number	2	2	1	1	1	2	2	3
Inner Shield	√	√	-	-	√	-	-	-
Lighting								
Light Type	-	-	EcoLed	EcoLed	EcoLed	SSLED	SSLED	EcoLed
Adjustable Intensity Lighting	-	-	-	√	-	√	√	√
Nº of Lamps	-	-	3	3	2	1	1	4
Installation								
Minimum height distance to a electric worktop hob (mm)	-	-	650	650	650	550	550	550
Minimum height distance to a gas worktop hob (mm)	-	-	650	650	650	660	660	660
Instalation with Outlet tube to the exterior / Recirculating	BOTH	BOTH	RECIRCULATION	RECIRCULATION	BOTH	BOTH	BOTH	BOTH
Easy Instalation System	√	√	√	√	√	√	√	√
Electric Connection								
Total Rush Power (W)	7530	7200	210,5	210,5	287	112	112	294
Rated Voltage (V)	220-240	220-240	220-240	220-240	220-240	220-240	220-240	220-240
Network Frequency (Hz)	50	50~60	50	50	50	50	50	50
Electrical Insulation Class	CLASS II	CLASS II	CLASS II	CLASS II	CLASS II	CLASE I	CLASE I	CLASS II
Plug	-	-	-	-	EU - 2 pins	-	-	EU - 2 pins
Accessories								
Upper Decorative tube Extension	-	-	-	-	-	-	-	-
White Decorative Tube	-	-	-	-	-	-	-	-
Black Decorative Tube	-	-	-	-	-	-	-	-
Island Tube Enhancer	-	-	-	-	-	-	-	-
Check Valve	-	-	-	-	02832004	-	-	02832006
MAX PRO Metal Filter	-	-	-	-	-	-	-	02800917
Metal Filter	02800935*	02800935*	-	-	02811004*	02800930	02800930	02800200*
DUAL Filter (metal + active charcoal)	02800937	02800937	02800922*	02811003*	02811003	02800922	02800922	02800918
Active Charcoal Filter	02800939	02800939	-	-	-	-	-	02859398
Noiseless Flexible Duct	02893002	02893002	-	-	02893002	-	-	02893002

02111001	02111305	02097202	02197313	02025205	02119311	02195309	02195310	02000103	02184406	02184006
8422248077750	8422248077798	8422248061681	8422248062121	8422248077736	8422248077743	8422248077774	8422248077781	8422248102025	8422248102032	8422248102445
ISLA SIRIN 1000 WH	Isla Fenix 1000 X /A	ISLA LEGEND 900 XGBK	ISLA SYGMA 900 X /E	ISLA GAMMA 900 X /D	Isla Vega X /C	ANGOLO BOX 1000 X /C	ANGOLO X /D	PRO SILENCE	GRECO PRO SILENCE 90 BK	GRECO PRO SILENCE 90 WH
Island	Island	Island	Island	Island	Island	Corner	Corner	Roof motor	Vertical	Vertical
58,9	58,9	26	56,3	55,7	53,6	56,3	56,3	-	45,5	45,5
A	A	A+	A	A	A	A	A	-	A	A
31,5	31,5	33,1	30,6	30,2	30,6	30,6	30,6	-	32,3	32,3
A	A	A	A	A	A	A	A	-	A	A
36,6	36,6	36	36	36,6	41,2	36	36	-	43,2	43,2
A	A	A	A	A	A	A	A	-	A	A
91,2	91,2	91,2	91,2	91,2	91,2	91,2	91,2	-	69,5	69,5
B	B	B	B	B	B	B	B	-	D	D
340	340	200	340	340	340	340	340	-	282,4	282,4
600	600	645	600	600	600	600	600	-	582,1	582,1
850	850	820	850	800	850	800	850	-	865,3	865,3
50	50	40	50	50	50	50	50	-	44	44
65	65	64	65	65	65	65	65	-	56	56
67	67	67	67	67	67	67	67	-	65	65
0,3	0,3	0,41	0,26	0,26	0,32	0,26	0,26	-	0,48	0,48
0	0	0	0	0	0	0	0	-	0	0
0,9	0,9	0,8	0,9	0,9	0,9	0,9	0,9	-	0,8	0,8
54,6	54,6	44,8	53,7	53	54,6	53,7	53,7	-	48	48
350,4	350,4	344,8	416,9	429,4	421,1	416,9	416,9	-	527,2	527,2
380	380	244	411	405	416	411	411	-	379	379
132,8	132,8	70,8	155,7	159,8	154,1	155,7	155,7	-	137	137
14	14	7	7	14	14	7	7	-	7,5	7,5
513	513	252	252	513	513	252	252	-	324	324
1000	1000	900	900	900	600	1000	985	Ø400	900	900
600	600	610	600	600	480	1000	985	Ø400	290	290
500	500	1040	1040	1190	1185	1160	955	755	1160	1160
285	285	790	790	872	785	825	765	755	845	845
150	150	150/125	150/125	150/125	150/125	150/125	150/125	200	200	200
BT3	BT3	BTDCA	BT3	BT3	BT3	BT3	BT3	PRO SILENCE	PRO SILENCE	PRO SILENCE
3+1	3+1	4 + 1	2 + 1	2 + 1	2 + 1	2 + 1	2 + 1	-	3+1	3+1
280	280	130	280	280	280	280	280	155	162	162
450	450	455	450	450	450	450	450	-	379	379
470	470	470	470	470	470	470	470	-	-	-
TC4i	TC4i	TC5i	VL3i	VL3i	VL3i	VL3i	VL3i	-	TC4i	TC4i
√	√	√	√	√	√	√	√	-	√	√
√	√	√	-	-	-	-	-	-	√	√
Metallic	Metallic	Metallic	Metallic	Metallic	Metallic	Metallic	Metallic	-	Metallic	Metallic
3	3	4	4	1	2	3	3	-	1+1	1+1
-	-	-	-	-	-	-	-	-	-	-
EcoLed	EcoLed	EcoLed	EcoLed	EcoLed	EcoLed	EcoLed	EcoLed	-	EcoLed	EcoLed
√	√	√	-	-	-	-	-	-	-	-
4	4	2	2	4	4	2	2	-	2	2
550	550	650	650	650	650	650	650	-	530	530
660	660	650	650	650	650	650	650	-	650	650
BOTH	BOTH	BOTH	BOTH	BOTH	BOTH	BOTH	BOTH	-	EXTERIOR	EXTERIOR
√	√	√	√	√	√	√	√	-	√	√
294	294	137	287	294	294	287	287	155	162	162
220-240	220-240	220-240	220-240	220-240	220-240	220-240	220-240	220-240	220-240	220-240
50	50	50	50	50	50	50	50	50	50	50
CLASS II	CLASS II	CLASS II	CLASS II	CLASS II	CLASS II	CLASS II	CLASS II	CLASS I	CLASS I	CLASS I
EU - 2 pins	EU - 2 pins	EU - 2 pins	EU - 2 pins	EU - 2 pins	EU pla- 2 Pins	EU - 2 pins	EU - 2 pins	-	-	-
-	-	-	-	-	-	02853300	-	-	02861303	02861303
-	-	-	-	-	-	-	-	-	-	-
-	-	-	-	-	-	-	-	-	02861403	02861403
-	-	02864300	02864300	-	02863300	-	-	-	-	-
02832006	02832006	02832004	02832004	02832004	02832004	02832004	02832004	Included	-	-
02800917	02800917	02800917	02800917	-	02800917	02800917	-	-	-	-
02800200*	02800200*	02800200*	02800200*	02812000*	02800200*	02800200*	02800300*	-	02800930+02800904	02800930+02800904
02800918	02800918	02800918	02800918	-	02800918	02800918	-	-	-	-
02859398	02859398	02859398	02859398	02859398	02859398	-	02859398	-	-	-
02893002	02893002	02893002	02893002	02893002	02893002	02893002	02893002	-	-	-

Code	02181306	02184401	02184402	02133401	02184001	02133001	02184407	02145407
EAN	8422248102049	8422248082198	8422248106108	8422248106115	8422248106122	8422248106139	8422248106146	8422248106160
Model	GLADIUS PRO SILENCE 900 XGBK	GOYA PRO 90 BK	GOYA 90 BK CATA&ROCA	GOYA 70 BK CATA&ROCA	GOYA 90 WH CATA&ROCA	GOYA 70 WH CATA&ROCA	GRECO 90 BK CATA&ROCA	GRECO 80 BK CATA&ROCA
Type	Box	Vertical	Vertical	Vertical	Vertical	Vertical	Vertical	Vertical
Product fiche according to directives EU65/2014 - EN61591, EN60704-2-13, EN50564								
AEC (Anual Energy consumption) (kWh/annum)	45,5	14,5	22,8	22,8	22,8	22,8	56,3	56,3
EEI class (Energy Efficiency Class)	A	A+++	A+	A+	A+	A+	A	A
FDE (Fluid Dynamic Efficiency)	32,3	39,7	35	35	35	35	30,6	30,6
FDE class (Fluid Dynamic Efficiency Class)	A	A	A	A	A	A	A	A
LE (Lighting Efficiency) (lux/W)	43,2	26,3	59,7	59,7	59,7	59,7	28,7	28,7
LE class (Lighting Efficiency Class)	A	B	A	A	A	A	A	A
GFE (Grease Filtering Efficiency)	69,5	75,5	91,2	91,2	91,2	91,2	91,2	91,2
GFE Class (Grease Filtering Efficiency class)	D	C	B	B	B	B	B	B
Air flow at minimum speed (m3/h)	282,4	200	200	200	200	200	340	340
Air flow at maximum speed (m3/h)	582,1	605	645	645	645	645	600	600
Air flow at intensive speed (TURBO) (m3/h)	865,3	825	820	820	820	820	850	850
Sound Power Level at minimum speed (dB)	44	40	40	40	40	40	50	50
Sound Power Level at maximum speed (dB)	56	64	64	64	64	64	65	65
Sound Power Level at intensive speed (TURBO) (dB)	65	69	67	67	67	67	67	67
Po (Power Consumption in off mode) (W)	0,48	0,4	0,4	0,4	0,4	0,4	0,43	0,43
Ps (Power Consumption in standby) (W)	0	0,4	0	0	0	0	0	0
Integration directive EU 66/2014								
f (Time Increase Factor)	0,8	0,6	0,7	0,7	0,7	0,7	0,9	0,9
EEI (Energy Efficiency Index)	48	29,3	39	39	39	39	53,7	53,7
QBEP (Flow Rate at Best Efficiency Point) (m3/h)	527,2	259,7	403	403	403	403	416,9	416,9
PBEP (Static Pressure Difference at Best Efficiency Point) (Pa)	379	326,2	233	233	233	233	411	411
WBEP (Electric Power Input at Best Efficiency Point) (W)	137	59,2	74,7	74,7	74,7	74,7	155,7	155,7
WL (Nominal Power Consumption of Lighting system) (W)	7,5	3	3,5	3,5	3,5	3,5	7	7
EMIDDLE (Average Illumination of Lighting system on Cooking surface) (lux)	324	79	208,8	208,8	208,8	208,8	201	201
External Dimensions								
Width (mm)	900	900	900	700	900	700	900	800
Depth (mm)	500	296	290	290	290	290	290	290
Total max height(mm	1030	1160	1160	1160	1160	1160	1160	1160
Total min height(mm	632	845	845	845	845	845	845	845
Outlet Diameter (mm)	200	150	150/125	150/125	150/125	150/125	150/125	150/125
Characteristics								
Motor	PRO SILENCE	BT4DC	BTDCA	BTDCA	BTDCA	BTDCA	BT3	BT3
Extraction Levels	3+1	5 + 1	4+1	4+1	4+1	4+1	3+1	3+1
Motor Maximum Power Consumption	162	140	130	130	130	130	280	280
Maximum Pressure	379	357	455	455	455	455	450	450
Intensive Speed (TURBO) Pressure	-	365	470	470	470	470	470	470
Control Type	TC4i	TFT Touch	TC5i	TC5i	TC5i	TC5i	TC4i	TC4i
Automatic shut-down timer	√	√	√	√	√	√	√	√
Electronic Filter Saturation Indicator	√	√	√	√	√	√	√	√
Filter Type	Metallic	Metallic	Metallic	Metallic	Metallic	Metallic	Metallic	Metallic
Anti-grease Filter Number	3	2 + 1	2+1	2+1	2+1	2+1	1+1	1+1
Inner Shield	-	-	-	-	-	-	-	-
Lighting								
Light Type	EcoLed	SS Led	Eco Led Strip	Eco Led Strip	Eco Led Strip	Eco Led Strip	EcoLed	EcoLed
Adjustable Intensity Lighting	-	√	√	√	√	√	√	√
Nº of Lamps	2	1	1	1	1	1	2	2
Installation								
Minimum height distance to a electric worktop hob (mm)	650	530	530	530	530	530	530	530
Minimum height distance to a gas worktop hob (mm)	650	650	650	650	650	650	650	650
Instalation with Outlet tube to the exterior / Recirculating	EXTERIOR	BOTH	BOTH	BOTH	BOTH	BOTH	BOTH	BOTH
Easy Instalation System	√	√	√	√	√	√	√	√
Electric Connection								
Total Rush Power (W)	162	143	133,5	133,5	133,5	133,5	287	287
Rated Voltage (V)	220-240	220-240	220-240	220-240	220-240	220-240	220-240	220-240
Network Frequency (Hz)	50	50	50	50	50	50	50	50
Electrical Insulation Class	CLASS I	CLASS I	CLASS II	CLASS II	CLASS II	CLASS II	CLASS II	CLASS II
Plug	-	-	EU - 2 pins	EU - 2 pins	EU - 2 pins	EU - 2 pins	EU - 2 pins	EU - 2 pins
Accessories								
Upper Decorative tube Extension	02861300	02861303	-	-	-	-	02861303	02861303
White Decorative Tube	-	-	-	-	02861005	02861005	-	-
Black Decorative Tube	-	02861403	02861405	02861405	-	-	02861403	02861403
Island Tube Enhancer	-	-	-	-	-	-	-	-
Check Valve	-	02832008	02832004	02832004	02832004	02832004	02832004	02832004
MAX PRO Metal Filter	-	-	-	-	-	-	-	-
Metal Filter	02800204*	02800905*/02800904*	02800905*/02800904*	02800905+02800904	02800905+02800904	02800905+02800904	02800930+02800904	02800930+02800904
DUAL Filter (metal + active charcoal)	-	02800918+02800938	02800918+02800938	02800918+02800938	02800918+02800938	02800918+02800938	02800922+02800938	02800922+02800938
Active Charcoal Filter	-	2859318	02859398	02859398	02859398	02859398	02859398	02859398
Noiseless Flexible Duct	-	02893002	02893002	02893002	02893002	02893002	02893002	02893002

02145203	02145007	02133407	02133007	02157403	02159405	02159006	02159506	02145406	02145006	02145506
8422248106177	8422248106184	8422248106191	8422248106207	8422248073790	8422248104777	8422248104821	8422248104869	8422248104791	8422248104838	8422248104876
GRECO 80 GR CATA&ROCA	GRECO 80 WH CATA&ROCA	GRECO 70 BK CATA&ROCA	GRECO 70 WH CATA&ROCA	THALASSA 1200XGBK	THALASSA 900XGBK	THALASSA 900XGWH	THALASSA 900XGGR	THALASSA 800XGBK	THALASSA 800XGWH	THALASSA 800XGGR
Vertical	Vertical	Vertical	Vertical	Vertical	Vertical	Vertical	Vertical	Vertical	Vertical	Vertical
56,3	56,3	56,3	56,3	25,3	14,5	14,5	14,5	14,5	14,5	14,5
A	A	A	A	A+	A+++	A+++	A+++	A+++	A+++	A+++
30,6	30,6	30,6	30,6	35	39,7	39,7	39,7	39,7	39,7	39,7
A	A	A	A	A	A	A	A	A	A	A
28,7	28,7	28,7	28,7	28,7	26,3	26,3	26,3	26,3	26,3	26,3
A	A	A	A	A	B	B	B	B	B	B
91,2	91,2	91,2	91,2	91,2	75,5	75,5	75,5	75,5	75,5	75,5
B	B	B	B	B	C	C	C	C	C	C
340	340	340	340	200	200	200	200	200	200	200
600	600	600	600	645	605	605	605	605	605	605
850	850	850	850	820	825	825	825	825	825	825
50	50	50	50	40	40	40	40	40	40	40
65	65	65	65	64	64	64	64	64	64	64
67	67	67	67	67	69	69	69	69	69	69
0,43	0,43	0,43	0,43	0,41	0,4	0,4	0,4	0,4	0,4	0,4
0	0	0	0	0	0	0	0	0	0	0
0,9	0,9	0,9	0,9	0,8	0,6	0,6	0,6	0,6	0,6	0,6
53,7	53,7	53,7	53,7	42	29,3	29,3	29,3	29,3	29,3	29,3
416,9	416,9	416,9	416,9	403	259,7	259,7	259,7	259,7	259,7	259,7
411	411	411	411	233	326,2	326,2	326,2	326,2	326,2	326,2
155,7	155,7	155,7	155,7	74,7	59,2	59,2	59,2	59,2	59,2	59,2
7	7	7	7	7	3	3	3	3	3	3
201	201	201	201	201	79	79	79	79	79	79
800	800	700	700	1200	900	900	900	800	800	800
290	290	290	290	430	314	314	314	314	314	314
1160	1160	1160	1160	1170	1170	1170	1170	1170	1170	1170
845	845	845	845	855	855	855	855	855	855	855
150/125	150/125	150/125	150/125	150/125	150/125	150/125	150/125	150/125	150/125	150/125
BT3	BT3	BT3	BT3	BTDCA	BT4DC	BT4DC	BT4DC	BT4DC	BT4DC	BT4DC
3+1	3+1	3+1	3+1	4+1	5 + 1	5 + 1	5 + 1	5 + 1	5 + 1	5 + 1
280	280	280	280	130	140	140	140	140	140	140
450	450	450	450	455	357	357	357	357	357	357
470	470	470	470	470	365	365	365	365	365	365
TC4i	TC4i	TC4i	TC4i	TC5i	TCD6i	TCD6i	TCD6i	TCD6i	TCD6i	TCD6i
√	√	√	√	√	√	√	√	√	√	√
√	√	√	√	√	√	√	√	√	√	√
Metallic	Metallic	Metallic	Metallic	Metallic	Metallic	Metallic	Metallic	Metallic	Metallic	Metallic
1+1	1+1	1+1	1+1	2+1	2+1	2+1	2+1	2+1	2+1	2+1
-	-	-	-	-	-	-	-	-	-	-
EcoLed	EcoLed	EcoLed	EcoLed	EcoLed	SS Led	SS Led	SS Led	SS Led	SS Led	SS Led
√	√	√	√	√	√	√	√	√	√	√
2	2	2	2	2	1	1	1	1	1	1
530	530	530	530	400	400	400	400	400	400	400
650	650	650	650	650	650	650	650	650	650	650
BOTH	BOTH	BOTH	BOTH	BOTH	BOTH	BOTH	BOTH	BOTH	BOTH	BOTH
√	√	√	√	√	√	√	√	√	√	√
287	287	287	287	137	143	143	143	143	143	143
220-240	220-240	220-240	220-240	220-240	220-240	220-240	220-240	220-240	220-240	220-240
50	50	50	50	50	50	50	50	50	50	50
CLASS II	CLASS II	CLASS II	CLASS II	CLASS II	CLASS I	CLASS I	CLASS I	CLASS I	CLASS I	CLASS I
EU - 2 pins	EU - 2 pins	EU - 2 pins	EU - 2 pins	EU - 2 pins	-	-	-	-	-	-
02861303	02861303	02861303	02861303	02861300	02861300	02861300	02861300	02861300	02861300	02861300
-	02861003	-	02861003	-	-	02861001	-	-	02861001	-
02861403	-	02861403	-	02861401	02861401	-	02861401	02861401	-	02861401
-	-	-	-	-	-	-	-	-	-	-
02832004	02832004	02832004	02832004	02832004	02832004	02832004	02832004	02832004	02832004	02832004
-	-	-	-	-	-	-	-	-	-	-
02800930+02800904	02800930+02800904	02800930+02800904	02800930+02800904	02800905* / 02800925*	02800905* / 02800925*	02800905* / 02800925*	02800905* / 02800925*	02800905* / 02800925*	02800905* / 02800925*	02800905* / 02800925*
02800922+02800938	02800922+02800938	02800922+02800938	02800922+02800938	02800918 / 02800927	02800918 / 02800927	02800918 / 02800927	02800918 / 02800927	02800918 / 02800927	02800918 / 02800927	02800918 / 02800927
02859398	02859398	02859398	02859398	02859398	02859318	02859318	02859318	02859318	02859318	02859318
02893002	02893002	02893002	02893002	02893002	02893002	02893002	02893002	02893002	02893002	02893002

Code	02178207	02178007	02127211	02127011	02059401	02078402	02027505	02059008	02078003
EAN	8422248104807	8422248104845	8422248104814	8422248104852	8422248094030	8422248094047	8422248094054	8422248094061	8422248094078
Model	THALASSA 700XGBK	THALASSA 700XGWH	THALASSA 600XGBK	THALASSA 600XGWH	VALTO 900 XGBK	VALTO 700 XGBK	VALTO 600 XGBK	VALTO 900 XGWH	VALTO 700 XGWH
Type	Vertical	Vertical	Vertical	Vertical	Vertical	Vertical	Vertical	Vertical	Vertical
Product fiche according to directives EU65/2014 - EN61591, EN60704-2-13, EN50564									
AEC (Anual Energy consumption) (kWh/annum)	14,5	14,5	14,5	14,5	23,1	23,1	23,1	23,1	23,1
EEI class (Energy Efficiency Class)	A+++	A+++	A+++	A+++	A+	A+	A+	A+	A+
FDE (Fluid Dynamic Efficiency)	39,7	39,7	39,7	39,7	30,7	30,7	30,7	30,7	30,7
FDE class (Fluid Dynamic Efficiency Class)	A	A	A	A	A	A	A	A	A
LE (Lighting Efficiency) (lux/W)	26,3	26,3	26,3	26,3	22,6	22,6	22,6	22,6	22,6
LE class (Lighting Efficiency Class)	B	B	B	B	B	B	B	B	B
GFE (Grease Filtering Efficiency)	75,5	75,5	75,5	75,5	60,9	60,9	60,9	60,9	60,9
GFE Class (Grease Filtering Efficiency class)	C	C	C	C	E	E	E	E	E
Air flow at minimum speed (m3/h)	200	200	200	200	170	170	170	170	170
Air flow at maximum speed (m3/h)	605	605	605	605	385	385	385	385	385
Air flow at intensive speed (TURBO) (m3/h)	825	825	825	825	575	575	575	575	575
Sound Power Level at minimum speed (dB)	40	40	40	40	44	44	44	44	44
Sound Power Level at maximum speed (dB)	64	64	64	64	61	61	61	61	61
Sound Power Level at intensive speed (TURBO) (dB)	69	69	69	69	69	69	69	69	69
Po (Power Consumption in off mode) (W)	0,4	0,4	0,4	0,4	0,4	0,4	0,4	0,4	0,4
Ps (Power Consumption in standby) (W)	0	0	0	0	0	0	0	0	0
Integration directive EU 66/2014									
f (Time Increase Factor)	0,6	0,6	0,6	0,6	0,9	0,9	0,9	0,9	0,9
EEI (Energy Efficiency Index)	29,3	29,3	29,3	29,3	44,7	44,7	44,7	44,7	44,7
QBEP (Flow Rate at Best Efficiency Point) (m3/h)	259,7	259,7	259,7	259,7	243,6	243,6	243,6	243,6	243,6
PBEP (Static Pressure Difference at Best Efficiency Point) (Pa)	326,2	326,2	326,2	326,2	284	284	284	284	284
WBEP (Electric Power Input at Best Efficiency Point) (W)	59,2	59,2	59,2	59,2	62,6	62,6	62,6	62,6	62,6
WL (Nominal Power Consumption of Lighting system) (W)	3	3	3	3	3,5	3,5	3,5	3,5	3,5
EMIDDLE (Average Illumination of Lighting system on Cooking surface) (lux)	79	79	79	79	22,6	22,6	22,6	22,6	22,6
External Dimensions									
Width (mm)	700	700	600	600	900	700	600	900	700
Depth (mm)	314	314	314	314	400	400	400	400	400
Total max height(mm	1170	1170	1170	1170	1120	1120	1120	1120	1120
Total min height(mm	855	855	855	855	820	820	820	820	820
Outlet Diameter (mm)	150/125	150/125	150/125	150/125	150/125	150/125	150/125	150/125	150/125
Characteristics									
Motor	BT4DC	BT4DC	BT4DC	BT4DC	T1DC	T1DC	T1DC	T1DC	T1DC
Extraction Levels	5 + 1	5 + 1	5 + 1	5 + 1	5 + 1	5 + 1	5 + 1	5 + 1	5 + 1
Motor Maximum Power Consumption	140	140	140	140	110	110	110	110	110
Maximum Pressure	357	357	357	357	250	250	250	250	250
Intensive Speed (TURBO) Pressure	365	365	365	365	315	315	315	315	315
Control Type	TCD6i	TCD6i	TCD6i	TCD6i	TCD6i	TCD6i	TCD6i	TCD6i	TCD6i
Automatic shut-down timer	√	√	√	√	√	√	√	√	√
Electronic Filter Saturation Indicator	√	√	√	√	√	√	√	√	√
Filter Type	Metallic	Metallic	Metallic	Metallic	Metallic	Metallic	Metallic	Metallic	Metallic
Anti-grease Filter Number	2+1	2+1	1+1	1+1	1	1	1	1	1
Inner Shield	-	-	-	-	-	-	-	-	-
Lighting									
Light Type	SS Led	SS Led	SS Led	SS Led	SS Led	SS Led	SS Led	SS Led	SS Led
Adjustable Intensity Lighting	√	√	√	√	√	√	√	√	√
Nº of Lamps	1	1	1	1	1	1	1	1	1
Installation									
Minimum height distance to a electric worktop hob (mm)	400	400	400	400	400	400	400	400	400
Minimum height distance to a gas worktop hob (mm)	650	650	650	650	650	650	650	650	650
Instalation with Outlet tube to the exterior / Recirculating	BOTH	BOTH	BOTH	BOTH	BOTH	BOTH	BOTH	BOTH	BOTH
Easy Instalation System	√	√	√	√	√	√	√	√	√
Electric Connection									
Total Rush Power (W)	143	143	143	143	113	113	113	113	113
Rated Voltage (V)	220-240	220-240	220-240	220-240	220-240	220-240	220-240	220-240	220-240
Network Frequency (Hz)	50	50	50	50	50	50	50	50	50
Electrical Insulation Class	CLASS I	CLASS I	CLASS I	CLASS I	CLASS I	CLASS I	CLASS I	CLASS I	CLASS I
Plug	-	-	-	-	-	-	-	-	-
Accessories									
Upper Decorative tube Extension	02861300	02861300	02861300	02861300	-	-	-	-	-
White Decorative Tube	-	02861001	-	02861001	-	-	-	-	-
Black Decorative Tube	02861401	-	02861401	-	-	-	-	-	-
Island Tube Enhancer	-	-	-	-	-	-	-	-	-
Check Valve	02832004	02832004	02832004	02832004	02832004	02832004	02832004	02832004	02832004
MAX PRO Metal Filter	-	-	-	-	-	-	-	-	-
Metal Filter	02800905* / 02800925*	02800905* / 02800925*	02800905* / 02800925*	02800905* / 02800925*	02800930	02800930	02800930	02800930	02800930
DUAL Filter (metal + active charcoal)	02800918 / 02800927	02800918 / 02800927	02800918 / 02800927	02800918 / 02800927	02800922	02800922	02800922	02800922	02800922
Active Charcoal Filter	02859318	02859318	02859318	02859318	02859394	02859394	02859394	02859394	02859394
Noiseless Flexible Duct	02893002	02893002	02893002	02893002	02893002	02893002	02893002	02893002	02893002

02027107	02059405	02059010	02078405	02078006	02027210	02027012	02032205	02032206	02032005	02032006
8422248094085	8422248102308	8422248102339	8422248102315	8422248102346	8422248102322	8422248102353	8422248102292	8422248102377	8422248102285	8422248102360
VALTO 600 XGWH	WANDA 900 XGBK	WANDA 900 XGWH	WANDA 700 XGBK	WANDA 700 XGWH	WANDA 600 XGBK	WANDA 600 XGWH	LENA 600 XGBK	LENA 500 XGBK	LENA 600 XGWH	LENA 500 XGWH
Vertical	Vertical	Vertical	Vertical	Vertical	Vertical	Vertical	Vertical	Vertical	Vertical	Vertical
23,1	11,1	11,1	11,1	11,1	11,1	11,1	43,57	43,57	43,57	43,57
A+	A++	A++	A++	A++	A++	A++	B	B	B	B
30,7	29,5	29,5	29,5	29,5	29,5	29,5	22,94	22,94	22,94	22,94
A	A	A	A	A	A	A	C	C	C	C
22,6	29,3	29,3	29,3	29,3	29,3	29,3	43,6	43,6	43,6	43,6
B	A	A	A	A	A	A	A	A	A	A
60,9	76,1	76,1	76,1	76,1	76,1	76,1	82,6	82,6	82,6	82,6
E	C	C	C	C	C	C	C	C	C	C
170	207,2	207,2	207,2	207,2	207,2	207,2	311,71	311,71	311,71	311,71
385	525,1	525,1	525,1	525,1	525,1	525,1	498,46	498,46	498,46	498,46
575	-	-	-	-	-	-	-	-	-	-
44	39	39	39	39	39	39	44,1	44,1	44,1	44,1
61	59	59	59	59	59	59	62,8	62,8	62,8	62,8
69	-	-	-	-	-	-	-	-	-	-
0,4	0,44	0,44	0,44	0,44	0,44	0,44	-	-	-	-
0	-	-	-	-	-	-	0,34	0,34	0,34	0,34
0,9	0,9	0,883	0,883	0,883	0,883	0,883	1,17	1,17	1,17	1,17
44,7	34,9	38,6	38,6	38,6	38,6	38,6	62,2	62,2	62,2	62,2
243,6	222,5	248,01	248,01	248,01	248,01	248,01	264,09	264,09	264,09	264,09
284	129	178,05	178,05	178,05	178,05	178,05	301,94	301,94	301,94	301,94
62,6	27	39,55	39,55	39,55	39,55	39,55	95,56	95,56	95,56	95,56
3,5	3	3	3	3	3	3	3	3	3	3
22,6	88	163,8	163,8	163,8	163,8	163,8	130,8	130,8	130,8	130,8
600	895	895	695	695	595	595	595	495	595	495
400	358	358	358	358	358	358	385	385	385	385
1120	1122	1122	1122	1122	1122	1122	1092	1092	1092	1092
820	772	772	772	772	772	772	742	742	742	742
150/125	150	150	150	150	150	150	150	150	150	150
T1DC	BLDC	BLDC	BLDC	BLDC	BLDC	BLDC	TT500	TT500	TT500	TT500
5 + 1	9	9	9	9	9	9	3	3	3	3
110	70	70	70	70	70	70	120	120	120	120
250	430	430	430	430	430	430	380	380	380	380
315	-	-	-	-	-	-	-	-	-	-
TCD6i	T02	T02	T02	T02	T02	T02	T02	T02	T02	T02
√	√	√	√	√	√	√	√	√	√	√
√	-	-	-	-	-	-	-	-	-	-
Metallic	Metallic	Metallic	Metallic	Metallic	Metallic	Metallic	Metallic	Metallic	Metallic	Metallic
1	1	1	1	1	1	1	1	1	1	1
-	-	-	-	-	-	-	-	-	-	-
SS Led	LED	LED	LED	LED	LED	LED	LED	LED	LED	LED
√	-	-	-	-	-	-	-	-	-	-
1	2	2	2	2	2	2	2	2	2	2
400	650	650	650	650	650	650	650	650	650	650
650	650	650	650	650	650	650	650	650	650	650
BOTH	BOTH	BOTH	BOTH	BOTH	BOTH	BOTH	BOTH	BOTH	BOTH	BOTH
√	√	√	√	√	√	√	√	√	√	√
113	73	73	73	73	73	73	123	123	123	123
220-240	220-240	220-240	220-240	220-240	220-240	220-240	220-240	220-240	220-240	220-240
50	50 / 60	50 / 60	50 / 60	50 / 60	50 / 60	50 / 60	50 / 60	50 / 60	50 / 60	50 / 60
CLASS I	CLASS I	CLASS I	CLASS I	CLASS I	CLASS I	CLASS I	CLASS I	CLASS I	CLASS I	CLASS I
-	√	√	√	√	√	√	√	√	√	√
-	-	-	-	-	-	-	-	-	-	-
-	-	-	-	-	-	-	-	-	-	-
-	-	-	-	-	-	-	-	-	-	-
-	-	-	-	-	-	-	-	-	-	-
02832004	-	-	-	-	-	-	-	-	-	-
-	-	-	-	-	-	-	-	-	-	-
02800930	02800963	02800963	02800963	02800963	02800963	02800963	02800963	02800963	02800963	02800963
02800922	-	-	-	-	-	-	-	-	-	-
02859394	02859492	02859492	02859492	02859492	02859492	02859492	02859492	02859492	02859492	02859492
02893002	02893002	02893002	02893002	02893002	02893002	02893002	02893002	02893002	02893002	02893002

Code	02181302	02029207	02021202	02060208	02029305	02021306	02132304	02075303
EAN	8422248082266	8422248101493	8422248101509	8422248102544	8422248068635	8422248068659	8422248062282	8422248073042
Model	GLADIUS 900 XGBK CAN ROCA	LEGEND 9000 XGBK	LEGEND 7000 XGBK	LEGEND 6000 XGBK	LEGEND 900 X	LEGEND 700 X	SYGMA 12000 X	SYGMA 9000 X
Type	Vertical	Box	Box	Box	Box	Box	Box	Box
Product fiche according to directives EU65/2014 - EN61591, EN60704-2-13, EN50564								
AEC (Anual Energy consumption) (kWh/annum)	23,5	9,9	10,8	9,9	42,1	42,1	56,3	56,3
EEI class (Energy Efficiency Class)	A+	A++	A++	A++	A	A	A	A
FDE (Fluid Dynamic Efficiency)	33,1	31,2	31,1	31,2	31,7	31,7	30,6	30,6
FDE class (Fluid Dynamic Efficiency Class)	A	A	A	A	A	A	A	A
LE (Lighting Efficiency) (lux/W)	41,2	28,5	30	28,5	36	36	36	36
LE class (Lighting Efficiency Class)	A	A	A	A	A	A	A	A
GFE (Grease Filtering Efficiency)	64,5	76,4	77,3	76,4	78,5	78,5	91,2	91,2
GFE Class (Grease Filtering Efficiency class)	E	C	C	C	C	C	B	B
Air flow at minimum speed (m3/h)	200	236,1	239,8	236,1	200	200	340	340
Air flow at maximum speed (m3/h)	550	638,8	637,4	638,8	524	524	600	600
Air flow at intensive speed (TURBO) (m3/h)	750	-	-	-	648	648	850	850
Sound Power Level at minimum speed (dB)	40	44	42	44	40	40	50	50
Sound Power Level at maximum speed (dB)	64	65	63	65	64	64	65	65
Sound Power Level at intensive speed (TURBO) (dB)	67	-	-	-	67	67	67	67
Po (Power Consumption in off mode) (W)	0,41	0,44	0,44	0,44	0,41	0,41	0,45	0,45
Ps (Power Consumption in standby) (W)	0	-	-	-	0	0	0	0
Integration directive EU 66/2014								
f (Time Increase Factor)	0,8	0,9	0,9	0,9	0,8	0,8	0,9	0,9
EEI (Energy Efficiency Index)	41,8	32,5	32	32,5	44,8	44,8	53,7	53,7
QBEP (Flow Rate at Best Efficiency Point) (m3/h)	344,8	203,4	236,5	203,4	390,3	390,3	416,9	416,9
PBEP (Static Pressure Difference at Best Efficiency Point) (Pa)	244	142	134	142	329	329	411	411
WBEP (Electric Power Input at Best Efficiency Point) (W)	70,8	25,7	28,3	25,7	112,6	112,6	155,7	155,7
WL (Nominal Power Consumption of Lighting system) (W)	3,5	2	2	2	7	7	7	7
EMIDDLE (Average Illumination of Lighting system on Cooking surface) (lux)	144,2	57	60	57	252	252	252	252
External Dimensions								
Width (mm)	900	895	695	595	900	700	1200	900
Depth (mm)	500	500	500	500	505	505	500	500
Total max height(mm	1030	998	998	998	1035	1035	1035	500
Total min height(mm	632	548	548	548	635	635	635	500
Outlet Diameter (mm)	150/125	150	150	150	150/125	150/125	150/125	500
Characteristics								
Motor	BTDCA	BLDC600	BLDC600	BLDC600	BTDCA	BTDCA	BT3	BT3
Extraction Levels	4+1	9	9	9	4+1	4+1	3 + 1	3 + 1
Motor Maximum Power Consumption	130	70	70	70	130	130	280	280
Maximum Pressure	455	220	220	220	455	455	450	450
Intensive Speed (TURBO) Pressure	470	-	-	-	470	470	470	470
Control Type	TC5i	T02	T02	T02	NL5i	NL5i	NL4i	NL4i
Automatic shut-down timer	√	√	√	√	√	√	√	√
Electronic Filter Saturation Indicator	√	√	√	√	√	√	√	√
Filter Type	Metallic	Metallic	Metallic	Metallic	Metallic	Metallic	Metallic	Metallic
Anti-grease Filter Number	3	3	2	2	3	2	4	3
Inner Shield	√	-	-	-	-	-	-	-
Lighting								
Light Type	Eco Led Strip	CSLED	CSLED	CSLED	EcoLed	EcoLed	EcoLed	EcoLed
Adjustable Intensity Lighting	√	-			√	√	√	√
Nº of Lamps	1	1	1	1	2	2	2	2
Installation								
Minimum height distance to a electric worktop hob (mm)	650	650	650	650	650	650	650	650
Minimum height distance to a gas worktop hob (mm)	650	650	650	650	650	650	650	650
Instalation with Outlet tube to the exterior / Recirculating	BOTH	BOTH	BOTH	BOTH	BOTH	BOTH	BOTH	BOTH
Easy Instalation System	√	√	√	√	√	√	√	√
Electric Connection								
Total Rush Power (W)	133,5	72	72	72	137	137	287	287
Rated Voltage (V)	220-240	220-240	220-240	220-240	220-240	220-240	220-240	220-240
Network Frequency (Hz)	50	50~60	50~60	50~60	50	50	50	50
Electrical Insulation Class	CLASS II	CLASS I	CLASS I	CLASS I	CLASS II	CLASS II	CLASS II	CLASS II
Plug	EU - 2 pins	√	√	√	EU - 2 pins	EU - 2 pins	EU - 2 pins	EU - 2 pins
Accessories								
Upper Decorative tube Extension	02861300	02863305	02863305	02863305	02861301	02861301	02861300	02861301
White Decorative Tube	-	-	-	-	-	-	-	-
Black Decorative Tube	-	-	-	-	-	-	-	-
Island Tube Enhancer	-	-	-	-	-	-	-	-
Check Valve	02832004	-	-	-	02832004	02832004	02832004	02832004
MAX PRO Metal Filter	-	-	-	-	02800917	02800917	02800917	02800917
Metal Filter	02800204*	02800974	02800973	02800975	02800200*	02800200*	02800200*	02800200*
DUAL Filter (metal + active charcoal)	-	-	-	-	02800918	02800918	02800918	02800918
Active Charcoal Filter	02859398	02859492	02859492	02859492	02859398	02859398	02859398	02859398
Noiseless Flexible Duct	02893002	02893002	02893002	02893002	02893002	02893002	02893002	02893002

02021307	02060308	02075400	02029600	02021600	02060600	02029601	02021601	02060601	02029309	02021309
8422248073059	8422248073066	8422248068079	8422248087070	8422248087087	8422248087094	8422248087100	8422248087117	8422248087124	8422248108706	8422248108690
SYGMA 7000 X	SYGMA 6000 X	SYGMA 900 BK	S PLUS 900 X	S PLUS 700 X	S PLUS 600 X	S-900 INOX	S-700 INOX	S-600 INOX	ST-9000 X	ST-7000 X
Box	Box	Box	Box	Box	Box	Box	Box	Box	Box	Box
56,3	56,3	88,2	102,5	102,5	102,5	51,9	51,9	51,9	36,4	36
A	A	C	C	C	C	C	C	C	C	C
30,6	30,6	18,1	16,3	16,3	16,3	9,8	9,8	9,8	10,12	9,84
A	A	C	D	D	D	E	E	E	E	E
36	36	36	36	36	36	8,4	8,4	8,4	39,3	38,9
A	A	A	A	A	A	E	E	E	A	A
91,2	91,2	91,2	88,5	88,5	88,5	74,6	74,6	74,6	70,46	70,11
B	B	B	B	B	B	D	D	D	D	D
340	340	320	385	385	385	210	210	210	165	161
600	600	645	645	645	645	400	400	400	302	294
850	850	790	-	-	-	-	-	-	-	-
50	50	50	56	56	56	50	50	50	58	58
65	65	65	74	74	74	62	62	62	62	63,5
67	67	67	-	-	-	-	-	-	-	-
0,45	0,45	0,26	0	0	0	0	0	0	0	0
0	0	0	0	0	0	0	0	0	-	-
0,9	0,9	1,3	1,4	1,4	1,4	1,6	1,6	1,6	1,6	1,7
53,7	53,7	78,8	83,4	83,4	83,4	84,4	84,4	84,4	74,9	75
416,9	416,9	388,5	375,3	375,3	375,3	208,6	208,6	208,6	192,63	172,17
411	411	282	295	295	295	123	123	123	110,53	118,37
155,7	155,7	168,7	188	188	188	72,9	72,9	72,9	58,45	57,55
7	7	7	7	7	7	11	11	11	2	2
252	252	252	188,8	188,8	188,8	92,5	92,5	92,5	79	78
700	600	900	900	700	600	900	700	600	900	700
500	500	500	500	500	500	470	470	470	500	500
1035	1035	1045	1045	1045	1045	932	932	932	998	998
635	635	730	730	730	730	675	675	675	548	548
150/125	150/125	150/125	150/125	150/125	150/125	150/125	150/125	150/125	150	150
BT3	BT3	BT2	M3R	M3R	M3R	K7 PLUS	K7 PLUS	K7 PLUS	TT300	TT300
3 + 1	3 + 1	2 + 1	3	3	3	3	3	3	3	3
280	280	240	270	270	270	95	95	95	65	65
450	450	400	430	430	430	200	200	200	172,85	171,83
470	470	405	-	-	-	-	-	-	-	-
NL4i	NL4i	VL3i	Mechanic	Mechanic	Mechanic	Mechanic	Mechanic	Mechanic	Mechanic	Mechanic
√	√	√	-	-	-	-	-	-	-	-
√	√	-	-	-	-	-	-	-	-	-
Metallic	Metallic	Metallic	Metallic	Metallic	Metallic	Metallic	Metallic	Metallic	Metallic	Metallic
2	2	2	3	2	2	3	3	3	3	2
-	-	-	-	-	-	-	-	-	-	-
EcoLed	EcoLed	EcoLed	EcoLed	EcoLed	EcoLed	LED E-14	LED E-14	LED E-14	CSLED	CSLED
√	√	-	-	-	-	-	-	-	-	-
2	2	2	2	2	2	2	2	2	1	1
650	650	650	650	650	650	650	650	650	650	650
650	650	650	650	650	650	650	650	650	650	650
BOTH	BOTH	BOTH	BOTH	BOTH	BOTH	BOTH	BOTH	BOTH	BOTH	BOTH
√	√	√	√	√	√	√	√	√	√	√
287	287	247	277	277	277	106	106	106	67	67
220-240	220-240	220-240	220-240	220-240	220-240	220-240	220-240	220-240	220-240	220-240
50	50	50	50	50	50	50	50	50	50	50
CLASS II	CLASS II	CLASS II	CLASS II	CLASS II	CLASS II	CLASS II	CLASS II	CLASS II	CLASS I	CLASS I
EU - 2 pins	EU - 2 pins	EU - 2 pins	EU - 2 pins	EU - 2 pins	EU - 2 pins	EU - 2 pins	EU - 2 pins	EU - 2 pins	-	-
02861301	02861301	-	02861301	02861301	02861301	02861302	02861302	02861302	02863305	02863305
-	-	-	-	-	-	-	-	-	-	-
-	-	-	-	-	-	-	-	-	-	-
-	-	-	-	-	-	-	-	-	-	-
02832004	02832004	02832004	02832001	02832001	02832001	02832004	02832004	02832004	-	-
02800917	02800917	02800917	02800917	02800917	02800917	02800917	02800917	02800917	-	-
02800200*	02800200*	02800200*	02800905*	02800905*	02800905*	02800905*	02800905*	02800905*	02800984	02800983
02800918	02800918	02800918	02800918	02800918	02800918	02800918	02800918	02800918	-	-
02859398	02859398	02859398	02859391	02859391	02859391	02859394	02859394	02859394	02859495	02859495
02893002	02893002	02893002	02893002	02893002	02893002	02893002	02893002	02893002	02893002	02893002

Code	02060309	02008210	02006205	02005219	02008299	02005299	02157309	02051303
EAN	8422248108683	8422248061797	8422248061780	8422248061803	8422248108102	8422248097413	8422248062299	8422248061827
Model	ST-6000 X	Gamma 900	Gamma 700	Gamma 600	CG5-T900 X	CG5-T600 X	BETA 1200 X	BETA 900 X
Type	Box	Curved Glass	Curved Glass	Curved Glass	Curved Glass	Curved Glass	Chimney	Chimney
Product fiche according to directives EU65/2014 - EN61591, EN60704-2-13, EN50564								
AEC (Anual Energy consumption) (kWh/annum)	36,1	56,3	56,3	56,3	47,6	46,4	56,3	56,3
EEI class (Energy Efficiency Class)	C	A	A	A	B	B	A	A
FDE (Fluid Dynamic Efficiency)	9,48	30,6	30,6	30,6	22,2	20,4	30,6	30,6
FDE class (Fluid Dynamic Efficiency Class)	E	A	A	A	C	C	A	A
LE (Lighting Efficiency) (lux/W)	39,6	36	36	36	49,33	49,33	36	36
LE class (Lighting Efficiency Class)	A	A	A	A	A	A	A	A
GFE (Grease Filtering Efficiency)	72,14	91,2	91,2	91,2	82,87	73,86	91,2	91,2
GFE Class (Grease Filtering Efficiency class)	D	B	B	B	C	D	B	B
Air flow at minimum speed (m3/h)	166	340	340	340	296	304,5	340	340
Air flow at maximum speed (m3/h)	292	600	600	600	495	499	600	600
Air flow at intensive speed (TURBO) (m3/h)	-	800	800	800	-	-	850	850
Sound Power Level at minimum speed (dB)	58	50	50	50	45,5	43,5	50	50
Sound Power Level at maximum speed (dB)	62,4	65	65	65	66	67,6	65	65
Sound Power Level at intensive speed (TURBO) (dB)	-	67	67	67	-	-	67	67
Po (Power Consumption in off mode) (W)	0	0,26	0,26	0,26	0	0	0,26	0,26
Ps (Power Consumption in standby) (W)	-	0	0	0	-	-	0	0
Integration directive EU 66/2014								
f (Time Increase Factor)	1,7	0,9	0,9	0,9	1,2	1,27	0,9	0,9
EEI (Energy Efficiency Index)	75,4	53,7	53,7	53,7	64,4	66,7	53,7	53,7
QBEP (Flow Rate at Best Efficiency Point) (m3/h)	171	416,9	416,9	416,9	287,5	260	416,9	416,9
PBEP (Static Pressure Difference at Best Efficiency Point) (Pa)	114,29	411	411	411	288	270	411	411
WBEP (Electric Power Input at Best Efficiency Point) (W)	57,27	155,7	155,7	155,7	103,6	95,7	155,7	155,7
WL (Nominal Power Consumption of Lighting system) (W)	2	7	7	7	3	3	7	7
EMIDDLE (Average Illumination of Lighting system on Cooking surface) (lux)	79	252	252	252	148	148	252	252
External Dimensions								
Width (mm)	600	900	700	600	900	600	1200	900
Depth (mm)	500	500	500	500	470	470	500	500
Total max height(mm	998	1070	1030	1020	776	776	1060	1020
Total min height(mm	548	820	780	765	426	426	660	720
Outlet Diameter (mm)	150	150/125	150/125	150/125	150	150	150/125	150/125
Characteristics								
Motor	TT300	BT3	BT3	BT3	TT500	TT500	BT3	BT3
Extraction Levels	3	2 + 1	2 + 1	2 + 1	3	3	2 + 1	2 + 1
Motor Maximum Power Consumption	65	280	280	280	120	120	280	280
Maximum Pressure	174,66	450	450	450	435	430	450	450
Intensive Speed (TURBO) Pressure	-	470	470	470	-	-	470	470
Control Type	Mechanic	VL3i	VL3i	VL3i	Mechanic	Mechanic	VL3i	VL3i
Automatic shut-down timer	-	√	√	√	-	-	√	√
Electronic Filter Saturation Indicator	-	-	-	-	-	-	-	-
Filter Type	Metallic	Metallic	Metallic	Metallic	Metallic	Metallic	Metallic	Metallic
Anti-grease Filter Number	2	1	1	1	1	1	4	3
Inner Shield	-	-	-	-	-	-	-	-
Lighting								
Light Type	CSLED	EcoLed	EcoLed	EcoLed	LED	LED	EcoLed	EcoLed
Adjustable Intensity Lighting	-	-	-	-	-	-	-	-
Nº of Lamps	1	2	2	2	2	2	2	2
Installation								
Minimum height distance to a electric worktop hob (mm)	650	650	650	650	650	650	650	650
Minimum height distance to a gas worktop hob (mm)	650	650	650	650	650	650	650	650
Instalation with Outlet tube to the exterior / Recirculating	BOTH	BOTH	BOTH	BOTH	BOTH	BOTH	BOTH	BOTH
Easy Instalation System	√	√	√	√	√	√	√	√
Electric Connection								
Total Rush Power (W)	67	287	287	287	123	123	287	287
Rated Voltage (V)	220-240	220-240	220-240	220-240	220-240	220-240	220-240	220-240
Network Frequency (Hz)	50	50	50	50	50/60	50/60	50	50
Electrical Insulation Class	CLASS I	CLASS II	CLASS II	CLASS II	CLASS I	CLASS I	CLASS II	CLASS II
Plug	-	EU - 2 pins	EU - 2 pins	EU - 2 pins	VDE	VDE	EU - 2 pins	EU - 2 pins
Accessories								
Upper Decorative tube Extension	02863305	02837300	02837300	02837300	-	-	02861300	02862301
White Decorative Tube	-	-	-	-	-	-	-	-
Black Decorative Tube	-	-	-	-	-	-	-	-
Island Tube Enhancer	-	-	-	-	-	-	-	-
Check Valve	-	02832004	02832004	02832004	-	-	02832004	02832004
MAX PRO Metal Filter	-	-	-	-	-	-	02800917	02800917
Metal Filter	02800985	02819000*	02819000*	02819000*	02800985	02800985	02800200*	02800200*
DUAL Filter (metal + active charcoal)	-	-	-	-	-	-	02800918	02800918
Active Charcoal Filter	02859495	02859398	02859398	02859398	02859492	02859492	02859398	02859398
Noiseless Flexible Duct	02893002	02893002	02893002	02893002	02893002	02893002	02893002	02893002

02093303	02050305	02003307	02004305	02003305	02002305	02004005	02003005	02002005	02004403	02002403	02004397
8422248061834	8422248061841	8422248101615	8422248087193	8422248087209	8422248087216	8422248087223	8422248087230	8422248087247	8422248087254	8422248087261	8422248106368
BETA 700 X	BETA 600 X	OMEGA 7500 X	OMEGA 900 X	OMEGA 700 X	OMEGA 600 X	OMEGA 900 WH	OMEGA 700 WH	OMEGA 600 WH	OMEGA 900 BK	OMEGA 600 BK	V-9000 X
Chimney	Chimney	Chimney	Chimney	Chimney	Chimney	Chimney	Chimney	Chimney	Chimney	Chimney	Chimney
56,3	56,3	40,9	95,7	95,7	95,7	95,7	95,7	95,7	95,7	95,7	58
A	A	A	C	C	C	C	C	C	C	C	C
30,6	30,6	30,4	17,8	17,8	17,8	17,8	17,8	17,8	17,8	17,8	11,4
A	A	A	D	D	D	D	D	D	D	D	E
36	36	37	38,4	38,4	38,4	38,4	38,4	38,4	6,7	38,4	28,6
A	A	A	A	A	A	A	A	A	F	A	A
91,2	91,2	78,8	90,3	90,3	90,3	90,3	90,3	90,3	90,3	90,3	62,5
B	B	C	B	B	B	B	B	B	B	B	E
340	340	412,5	385	385	385	385	385	385	385	385	319,5
600	600	592,9	645	645	645	645	645	645	645	645	480,2
850	850	-	-	-	-	-	-	-	-	-	-
50	50	58	57,8	57,8	57,8	57,8	57,8	57,8	57,8	57,8	52
65	65	68	71,8	71,8	71,8	71,8	71,8	71,8	71,8	71,8	64
67	67	-	-	-	-	-	-	-	-	-	-
0,26	0,26	0	0	0	0	0	0	0	0	0	0
0	0	-	0	0	0	0	0	0	0	0	0
0,9	0,9	0,9	1,4	1,4	1,4	1,4	1,4	1,4	1,4	1,4	1,6
53,7	53,7	49,9	80,1	80,1	80,1	80,1	80,1	80,1	80,1	80,1	83
416,9	416,9	344,7	371,8	371,8	371,8	371,8	371,8	371,8	371,8	371,8	224,2
411	411	379	314	314	314	314	314	314	314	314	174
155,7	155,7	119,4	182,5	182,5	182,5	182,5	182,5	182,5	182,5	182,5	95,4
7	7	2	7	7	7	7	7	7	7	7	3
252	252	73	269	269	269	269	269	269	269	269	85,7
700	600	745	900	700	600	900	700	600	900	600	900
500	500	480	500	500	500	500	500	500	500	500	470
1020	1020	990	1020	1020	1020	1020	1020	1020	1020	1020	870
720	720	640	720	720	720	720	720	720	720	720	570
150/125	150/125	150	150/125	150/125	150/125	150/125	150/125	150/125	150/125	150/125	150/125
BT3	BT3	TT600	M3R	M3R	M3R	M3R	M3R	M3R	M3R	M3R	120W
2 + 1	2 + 1	3	3	3	3	3	3	3	3	3	3
280	280	200	270	270	270	270	270	270	270	270	120
450	450	470	430	430	430	430	430	430	430	430	227
470	470		-	-	-	-	-	-	-	-	-
VL3i	VL3i	Mechanic	Mechanic	Mechanic	Mechanic	Mechanic	Mechanic	Mechanic	Mechanic	Mechanic	Mechanic
√	√	-	-	-	-	-	-	-	-	-	-
-	-	-	-	-	-	-	-	-	-	-	-
Metallic	Metallic	Metallic	Metallic	Metallic	Metallic	Metallic	Metallic	Metallic	Metallic	Metallic	Metallic
2	2	2	3	2	2	3	2	2	3	2	3
-	-	-	-	-	-	-	-	-	-	-	-
EcoLed	EcoLed	CSLED	EcoLed	EcoLed	EcoLed	EcoLed	EcoLed	EcoLed	EcoLed	EcoLed	CSLED
-	-	-	-	-	-	-	-	-	-	-	-
2	2	1	2	2	2	2	2	2	2	2	1
650	650	650	650	650	650	650	650	650	650	650	650
650	650	650	650	650	650	650	650	650	650	650	650
BOTH	BOTH	BOTH	BOTH	BOTH	BOTH	BOTH	BOTH	BOTH	BOTH	BOTH	BOTH
√	√	√	√	√	√	√	√	√	√	√	√
287	287	202	277	277	277	277	277	277	277	277	123
220-240	220-240	220-240	220-240	220-240	220-240	220-240	220-240	220-240	220-240	220-240	220-240
50	50	50/60	50	50	50	50	50	50	50	50	50
CLASS II	CLASS II	CLASS I	CLASS II	CLASS II	CLASS II	CLASS II	CLASS II	CLASS II	CLASS II	CLASS II	CLASS I
EU - 2 pins	EU - 2 pins	VDE	EU - 2 pins	EU - 2 pins	EU - 2 pins	EU - 2 pins	EU - 2 pins	EU - 2 pins	EU - 2 pins	EU - 2 pins	-
02862301	02862301	-	02862301	02862301	02862301	02862000	02862000	02862000	02862400	02862400	02863304
-	-	-	-	-	-	-	-	-	-	-	-
-	-	-	-	-	-	-	-	-	-	-	-
-	-	-	-	-	-	-	-	-	-	-	-
02832004	02832004	-	02832001	02832001	02832001	02832001	02832001	02832001	02832001	02832001	-
02800917	02800917	-	02800917	02800917	02800917	02800917	02800917	02800917	02800917	02800917	-
02800200*	02800200*	02800976	02800905*	02800905*	02800905*	02800905*	02800905*	02800905*	02800905*	02800905*	02859498
02800918	02800918	-	02800918	02800918	02800918	02800918	02800918	02800918	02800918	02800918	-
02859398	02859398	02859492	02859391	02859391	02859391	02859391	02859391	02859391	02859391	02859391	02859496
02893002	02893002	-	02893002	02893002	02893002	02893002	02893002	02893002	02893002	02893002	02893002

Code	02002397	02002097	02085301	02088306	02063207	02061207	02061007	02149402
EAN	8422248106351	8422248108492	8422248108478	8422248108485	8422248108072	8422248102711	8422248102698	8422248084161
Model	V-6000 X	V-6000 WH	V-7000 X	V-5000 X	V3-S900 X	V3-S600X	V3-S600 WH	Q-7790 BK
Type	Chimney	Chimney	Chimney	Chimney	Chimney	Chimney	Chimney	Chimney
Product fiche according to directives EU65/2014 - EN61591, EN60704-2-13, EN50564								
AEC (Anual Energy consumption) (kWh/annum)	59	59	60	59	29,1	29,1	29,1	95,7
EEI class (Energy Efficiency Class)	C	C	C	C	B	B	B	C
FDE (Fluid Dynamic Efficiency)	11,3	11,3	11,3	11,3	12,6	12,6	12,6	17,8
FDE class (Fluid Dynamic Efficiency Class)	E	E	E	E	E	E	E	D
LE (Lighting Efficiency) (lux/W)	28,6	28,6	29,7	29,1	92,9	92,9	92,9	36
LE class (Lighting Efficiency Class)	A	A	A	A	A	A	A	A
GFE (Grease Filtering Efficiency)	62,5	62,5	62,5	62,5	66,7	66,7	66,7	90,3
GFE Class (Grease Filtering Efficiency class)	E	E	E	E	D	D	D	B
Air flow at minimum speed (m3/h)	318,4	318,4	321,1	317,5	214,6	214,6	214,6	385
Air flow at maximum speed (m3/h)	479,5	479,5	478,9	478,3	348,2	348,2	348,2	645
Air flow at intensive speed (TURBO) (m3/h)	-	-	-	-	-	-	-	-
Sound Power Level at minimum speed (dB)	52	52	52	51,1	55	55	55	58
Sound Power Level at maximum speed (dB)	64	64	64	63,8	65	65	65	72
Sound Power Level at intensive speed (TURBO) (dB)	-	-	-	-	-	-	-	-
Po (Power Consumption in off mode) (W)	0	0	0	0	0	0	0	0
Ps (Power Consumption in standby) (W)	0	0	0	0	-	-	-	0
Integration directive EU 66/2014								
f (Time Increase Factor)	1,6	1,6	1,6	1,6	1,5	1,5	1,5	1,4
EEI (Energy Efficiency Index)	83,5	83,5	83,6	83,4	65,8	65,8	65,8	80,1
QBEP (Flow Rate at Best Efficiency Point) (m3/h)	239,7	239,7	287,4	240,1	175,3	175,3	175,3	371,8
PBEP (Static Pressure Difference at Best Efficiency Point) (Pa)	166	166	140	166	132	132	132	314
WBEP (Electric Power Input at Best Efficiency Point) (W)	97,9	97,9	98,7	97,6	51,1	51,1	51,1	182,5
WL (Nominal Power Consumption of Lighting system) (W)	3	3	3	3	1,5	1,5	1,5	7
EMIDDLE (Average Illumination of Lighting system on Cooking surface) (lux)	85,8	85,8	89,2	87,4	139	139	139	252
External Dimensions								
Width (mm)	600	600	700	500	900	600	600	900
Depth (mm)	470	470	470	470	465	465	465	560
Total max height(mm	870	870	870	870	960	960	960	1140
Total min height(mm	570	570	570	570	580	580	580	720
Outlet Diameter (mm)	150/125	150/125	150/125	150/125	150	150	150	150/125
Characteristics								
Motor	120W	120W	120W	120W	65W	65W	65W	M3R
Extraction Levels	3	3	3	3	3	3	3	3
Motor Maximum Power Consumption	120	120	120	120	65	65	65	270
Maximum Pressure	227	227	227	227	132	132	132	430
Intensive Speed (TURBO) Pressure	-	-	-	-	-	-	-	-
Control Type	Mechanic	Mechanic	Mechanic	Mechanic	Mechanic	Mechanic	Mechanic	Mechanic
Automatic shut-down timer	-	-	-	-	-	-	-	-
Electronic Filter Saturation Indicator	-	-	-	-	-	-	-	-
Filter Type	Metallic	Metallic	Metallic	Metallic	Metallic	Metallic	Metallic	Metallic
Anti-grease Filter Number	2	2	3	2	3	2	2	2
Inner Shield	-	-	-	-	-	-	-	-
Lighting								
Light Type	CSLED	CSLED	CSLED	CSLED	CSLED	CSLED	CSLED	EcoLed
Adjustable Intensity Lighting	-	-	-	-	-	-	-	-
Nº of Lamps	1	1	1	1	1	1	1	2
Installation								
Minimum height distance to a electric worktop hob (mm)	650	650	650	650	650	650	650	650
Minimum height distance to a gas worktop hob (mm)	650	650	650	650	650	650	650	650
Instalation with Outlet tube to the exterior / Recirculating	BOTH	BOTH	BOTH	BOTH	BOTH	BOTH	BOTH	BOTH
Easy Instalation System	√	√	√	√	√	√	√	√
Electric Connection								
Total Rush Power (W)	123	123	123	123	66,5	66,5	66,5	277
Rated Voltage (V)	220-240	220-240	220-240	220-240	220-240	220-240	220-240	220-240
Network Frequency (Hz)	50	50	50	50	50	50	50	50
Electrical Insulation Class	CLASS I	CLASS I	CLASS I	CLASS I	CLASS II	CLASS II	CLASS II	CLASS II
Plug	-	-	-	-	VDE	VDE	VDE	EU - 2 pins
Accessories								
Upper Decorative tube Extension	02863304	-	02863304	02863304	-	-	-	02885400
White Decorative Tube	-	-	-	-	-	-	-	-
Black Decorative Tube	-	-	-	-	-	-	-	-
Island Tube Enhancer	-	-	-	-	-	-	-	-
Check Valve	-	-	-	-	-	-	-	02832001
MAX PRO Metal Filter	-	-	-	-	-	-	-	02800917
Metal Filter	02859498	02859498	02859499	02859499	02800986	02800982	02800982	02800905
DUAL Filter (metal + active charcoal)	-	-	-	-	-	-	-	02800918
Active Charcoal Filter	02859496	02859496	02859496	02859496	02859497	02859497	02859497	02859391
Noiseless Flexible Duct	02893002	02893002	02893002	02893002	02893002	02893002	02893002	02893002

02148402	02165202	02052300	02088310	02052400	02052000	02088010	02052803	02189005	02186207	02189306	02186202
8422248084178	8422248070492	8422248017602	8422248039024	8422248017619	8422248017596	8422248039031	8422248059824	8422248093729	8422248105774	8422248082327	8422248082334
Q-7760 BK	CHORUS XGX	NEBLIA 600 X	NEBLIA 500 INOX	NEBLIA 600 BK	NEBLIA 600 WH	NEBLIA 500 WH	NEBLIA IVORY	TENTA 90 GWH	CORONA X 120	CORONA X 90	CORONA X 70
Chimney	MW Box	Chimney	Chimney	Chimney	Chimney	Chimney	Chimney	Integrated	Integrated	Integrated	Integrated
95,7	49	-	-	-	-	-	-	24,7	56,3	53,6	53,6
C	C	-	-	-	-	-	-	A+	A	A	A
17,8	9,8	-	-	-	-	-	-	37,5	30,6	30,6	30,6
D	E	-	-	-	-	-	-	A	A	A	A
36	36	-	-	-	-	-	-	23,7	55,7	55,7	55,7
A	A	-	-	-	-	-	-	B	A	A	A
90,3	74,6	-	-	-	-	-	-	85,79	84,27	84,27	84,27
B	D	-	-	-	-	-	-	B	C	C	C
385	210	-	-	-	-	-	-	245	340	340	340
645	400	-	-	-	-	-	-	509,4	600	600	600
-	-	-	-	-	-	-	-	765,3	850	850	850
58	50	-	-	-	-	-	-	46	50	50	50
72	62	-	-	-	-	-	-	63	65	65	65
-	-	-	-	-	-	-	-	67	67	67	67
0	0	-	-	-	-	-	-	0,49	0,45	0,26	0,26
0	0	-	-	-	-	-	-	0	0	0	0
1,4	1,6	-	-	-	-	-	-	0,7	0,9	0,9	0,9
80,1	82,6	-	-	-	-	-	-	40,3	52,1	52,1	52,1
371,8	208,6	-	-	-	-	-	-	346,6	416,9	416,9	416,9
314	123	-	-	-	-	-	-	298	411	411	411
182,5	72,9	-	-	-	-	-	-	76,6	155,7	155,7	155,7
7	7	-	-	-	-	-	-	7	3,5	3,5	3,5
252	252	-	-	-	-	-	-	166	195	195	195
600	598	900	600	900	600	900	600	900	1195	895	695
560	470	560	560	560	560	560	560	310-350	310-350	310-350	310-350
1110	1140	1140	1110	1140	1110	1140	1110	331	339	339	339
655	775	720	655	720	655	720	655	331	339	339	339
150/125	150/125	150/125	150/125	150/125	150/125	150/125	150/125	150	150/125	150/125	150/125
M3R	K7 PLUS	M3R	M3R	M3R	M3R	M3R	M3R	BT4DC	BT3	BT3	BT3
3	3	3	3	3	3	3	3	5+1	2 + 1	2 + 1	2 + 1
270	95	270	270	270	270	270	270	135	280	280	280
430	200	430	430	430	430	430	430	357	450	450	450
-	-	-	-	-	-	-	-	365	470	470	470
Mechanic	Mechanic	Mechanic	Mechanic	Mechanic	Mechanic	Mechanic	Mechanic	TCD6i	VL3i	VL3i	VL3i
-	-	-	-	-	-	-	-	√	√	√	√
-	-	-	-	-	-	-	-	√	-	-	-
Metallic	Metallic	Metallic	Metallic	Metallic	Metallic	Metallic	Metallic	Metallic	Metallic	Metallic	Metallic
2	2	2	2	2	2	2	2	3	2	2	1
-	-	-	-	-	-	-	-	-	-	-	-
EcoLed	EcoLed	Halogen E-14	Halogen E-14	Halogen E-14	Halogen E-14	Halogen E-14	Halogen E-14	SSLED	Eco Led Strip	Eco Led Strip	Eco Led Strip
-	-	-	-	-	-	-	-	√	-	-	-
2	2	2	2	2	2	2	2	1	2	1	1
650	592	650	650	650	650	650	650	550	550	550	550
650	692	650	650	650	650	650	650	650	650	650	650
BOTH	BOTH	BOTH	BOTH	BOTH	BOTH	BOTH	BOTH	BOTH	BOTH	BOTH	BOTH
√	√	√	√	√	√	√	√	√	√	√	√
277	102	277	277	277	277	277	277	146	283,5	283,5	283,5
220-240	220-240	220-240	220-240	220-240	220-240	220-240	220-240	220-240	220-240	220-240	220-240
50	50	50	50	50	50	50	50	50	50	50	50
CLASS II	CLASS II	CLASS II	CLASS II	CLASS II	CLASS II	CLASS II	CLASS II	CLASS I	CLASS II	CLASS II	CLASS II
EU - 2 pins	EU - 2 pins	EU - 2 pins	EU - 2 pins	EU - 2 pins	EU - 2 pins	EU - 2 pins	EU - 2 pins	-	EU - 2 pins	EU - 2 pins	EU - 2 pins
02883400	-	02885300	02883300	02885400	02883300	02885400	02883400	-	-	-	-
-	-	-	-	-	-	-	-	-	-	-	-
-	-	-	-	-	-	-	-	-	-	-	-
-	-	-	-	-	-	-	-	-	-	-	-
02832001	02832004	02832001	02832001	02832001	02832001	02832001	02832001	02832008	02832004	02832004	02832004
-	02800917	02800917	-	02800917	-	02800917	-	-	-	-	-
02800940	02800905*	02800905	02800940	02800905	02800940	02800905	02800940	02811000	02800205	02800205	02800943
-	02800918	02800918	-	02800918	-	02800918	-	02811003	-	-	-
02859391	02859394	02859391	02859391	02859391	02859391	02859391	02859391	2859318	02859398	02859398	02859398
02893002	02893002	02893002	02893002	02893002	02893002	02893002	02893002	02893002	02893002	02893002	02893002

Code	02186205	02189307	02186203	02186206	02131207	02130207	02131208	02130208
EAN	8422248084314	8422248082341	8422248082358	8422248105804	8422248078313	8422248078290	8422248078320	8422248078306
Model	CORONA X 60	ARMONIA 90 X	ARMONIA 60 X	ARMONIA 45 X	GC DUAL 75 WH	GC DUAL 45 WH	GC DUAL 75 BK	GC DUAL 45 BK
Type	Integrated	Integrated	Integrated	Integrated	Canopy	Canopy	Canopy	Canopy
Product fiche according to directives EU65/2014 - EN61591, EN60704-2-13, EN50564								
AEC (Anual Energy consumption) (kWh/annum)	53,6	102,5	102,5	102,5	58,3	58,3	58,3	58,3
EEI class (Energy Efficiency Class)	A	C	C	C	A	A	A	A
FDE (Fluid Dynamic Efficiency)	30,6	16,3	16,3	16,3	30,2	30,2	30,2	30,2
FDE class (Fluid Dynamic Efficiency Class)	A	D	D	D	A	A	A	A
LE (Lighting Efficiency) (lux/W)	55,7	38,4	38,4	38,4	16,1	16,1	16,1	16,1
LE class (Lighting Efficiency Class)	A	A	A	A	C	C	C	C
GFE (Grease Filtering Efficiency)	84,27	88,5	88,5	88,5	91,2	91,2	91,2	91,2
GFE Class (Grease Filtering Efficiency class)	C	B	B	B	B	B	B	B
Air flow at minimum speed (m3/h)	340	385	385	385	340	340	340	340
Air flow at maximum speed (m3/h)	600	645	645	645	600	600	600	600
Air flow at intensive speed (TURBO) (m3/h)	850	-	-	-	820	820	820	820
Sound Power Level at minimum speed (dB)	50	56	56	56	50	50	50	50
Sound Power Level at maximum speed (dB)	65	70	70	70	65	65	65	65
Sound Power Level at intensive speed (TURBO) (dB)	67	-	-	-	67	67	67	67
Po (Power Consumption in off mode) (W)	0,26	0	0	0	0,3	0,3	0,3	0,3
Ps (Power Consumption in standby) (W)	0	0	0	0	0	0	0	0
Integration directive EU 66/2014								
f (Time Increase Factor)	0,9	1,4	1,4	1,4	0,9	0,9	0,9	0,9
EEI (Energy Efficiency Index)	52,1	83,4	83,4	83,4	54,4	54,4	54,4	54,4
QBEP (Flow Rate at Best Efficiency Point) (m3/h)	416,9	375,3	375,3	375,3	429,4	429,4	429,4	429,4
PBEP (Static Pressure Difference at Best Efficiency Point) (Pa)	411	295	295	295	405	405	405	405
WBEP (Electric Power Input at Best Efficiency Point) (W)	155,7	188,8	188,8	188,8	159,8	159,8	159,8	159,8
WL (Nominal Power Consumption of Lighting system) (W)	3,5	7	7	7	7	7	7	7
EMIDDLE (Average Illumination of Lighting system on Cooking surface) (lux)	195	269	269	269	113	113	113	113
External Dimensions								
Width (mm)	595	898	598		792	492	792	492
Depth (mm)	310-350	320-350	320-350		277	277	277	277
Total max height(mm	339	339	339		300	300	300	300
Total min height(mm	339	339	339		300	300	300	300
Outlet Diameter (mm)	150/125	150/125	150/125		150/125	150/125	150/125	150/125
Characteristics								
Motor	BT3	M3R	M3R	M3R	BT3	BT3	BT3	BT3
Extraction Levels	2 + 1	3	3	3	3+1	3+1	3+1	3+1
Motor Maximum Power Consumption	280	270	270	270	280	280	280	280
Maximum Pressure	450	430	430	430	450	450	450	450
Intensive Speed (TURBO) Pressure	470	-	-	-	470	470	470	470
Control Type	VL3i	Mechanic	Mechanic	Mechanic	TC4i	TC4i	TC4i	TC4i
Automatic shut-down timer	√	-	-	-	√	√	√	√
Electronic Filter Saturation Indicator	-	-	-	-	√	√	√	√
Filter Type	Metallic	Metallic	Metallic	Metallic	Metallic	Metallic	Metallic	Metallic
Anti-grease Filter Number	1	2	2	2	1	1	1	1
Inner Shield	-	-	-	-	-	-	-	-
Lighting								
Light Type	Eco Led Strip	EcoLed	EcoLed	EcoLed	EcoLed	EcoLed	EcoLed	EcoLed
Adjustable Intensity Lighting	-	-	-	-	-	-	-	-
Nº of Lamps	1	2	2	2	2	2	2	2
Installation								
Minimum height distance to a electric worktop hob (mm)	550	550	550	550	550	550	550	550
Minimum height distance to a gas worktop hob (mm)	650	650	650	650	650	650	650	650
Instalation with Outlet tube to the exterior / Recirculating	BOTH	BOTH	BOTH	BOTH	BOTH	BOTH	BOTH	BOTH
Easy Instalation System	√	√	√	√	√	√	√	√
Electric Connection								
Total Rush Power (W)	283,5	277	277	277	287	287	287	287
Rated Voltage (V)	220-240	220-240	220-240	220-240	220-240	220-240	220-240	220-240
Network Frequency (Hz)	50	50	50	50	50	50	50	50
Electrical Insulation Class	CLASS II	CLASS II	CLASS II	CLASS II	CLASS II	CLASS II	CLASS II	CLASS II
Plug	EU - 2 pins	EU - 2 pins	EU - 2 pins	EU - 2 pins	EU - 2 pins	EU - 2 pins	EU - 2 pins	EU - 2 pins
Accessories								
Upper Decorative tube Extension	-	-	-	-	-	-	-	-
White Decorative Tube	-	-	-	-	-	-	-	-
Black Decorative Tube	-	-	-	-	-	-	-	-
Island Tube Enhancer	-	-	-	-	-	-	-	-
Check Valve	02832004	02832001	02832001	02832001	02832004	02832004	02832004	02832004
MAX PRO Metal Filter	-	-	-	-	-	-	-	-
Metal Filter	02800205	02800207	02811002	02811000	02800903	02800904	02800903	02800904
DUAL Filter (metal + active charcoal)	-	-	-	-	-	02800938	-	02800938
Active Charcoal Filter	02859398	02859391	02859391	02859391	02859398	02859398	02859398	02859398
Noiseless Flexible Duct	02893002	02893002	02893002	02893002	02893002	02893002	02893002	02893002

02031308	02030308	02130303	02131303	02131305	02030305	02030307	02030007	02030407	02031300	02030300	02130402
8422248103589	8422248103572	8422248075206	8422248075190	8422248077835	8422248077842	8422248087346	8422248087353	8422248087360	8422248108461	8422248108454	8422248082723
GCX 83 SD	GCX 53 SD	GP45X	GP75X	GL 75 X	GL 45 X	GT-PLUS 45 X	GT-PLUS 45 WH	GT-PLUS 45 BK	GCB 73 X	GCB 55 X	G 50 LUX GBK
Canopy	Canopy	Canopy	Canopy	Canopy	Canopy	Canopy	Canopy	Canopy	Canopy	Canopy	Canopy
56,1	56,1	58,3	58,3	58,3	58,3	90,3	90,3	90,3	54	54	49
A	A	A	A	A	A	C	C	C	C	C	C
30,2	30,2	30,2	30,2	30,2	30,2	16,3	16,3	16,3	10,1	10,1	9,8
A	A	A	A	A	A	D	D	D	E	E	E
26	26	24,3	24,3	24,3	24,3	24,3	24,3	24,3	29,5	30,4	36
B	B	B	B	B	B	B	B	B	A	A	A
91,2	91,2	91,2	91,2	91,2	91,2	91,2	91,2	91,2	58,3	58,3	74,6
B	B	B	B	B	B	B	B	B	E	E	D
340	340	340	340	340	340	300	300	300	283,1	282	210
600	600	600	600	600	600	645	645	645	372,2	371,1	400
750	750	750	750	820	820	-	-	-	-	-	-
50	50	50	50	50	50	50	50	50	60	59	50
65	65	65	65	65	65	65	65	65	66,4	65,9	62
67	67	67	67	67	67	-	-	-	-	-	-
0,3	0,3	0,3	0,3	0,3	0,3	0	0	0	0	0	0
0	0	0	0	0	0	0	0	0	0	0	0
0,9	0,9	0,9	0,9	0,9	0,9	1,4	1,4	1,4	1,64	1,64	1,6
54,4	54,4	54,4	54,4	54,4	54,4	82,2	82,2	82,2	83,5	83,6	82,6
429,4	429,4	429,4	429,4	429,4	429,4	358,1	358,1	358,1	198,1	197,5	208,6
405	405	405	405	405	405	270	270	270	160	161	123
159,8	159,8	159,8	159,8	159,8	159,8	164,9	164,9	164,9	86,9	87,2	72,9
7	7	7	7	7	7	7	7	7	3	3	7
170	170	170	170	170	170	170	170	170	88,4	91,2	252
830	530	530	830	792	492	492	492	492	730	550	530
280	253	280	280	277	277	277	277	277	310	310	310
316	316	352	352	315	280	280	280	280	187	187	172
316	316	352	352	315	280	280	280	280	187	187	172
150/125	150/125	150/125	150/125	150/125	150/125	150/125	150/125	150/125	150/125	150/125	150/125
BT3	BT3	BT3	BT3	BT3	BT3	BT2	BT2	BT2	120W	120W	K7 PLUS
3+1	3+1	3+1	3+1	3+1	3+1	3	3	3	3	3	3
280	280	280	280	280	280	200	200	200	120	120	95
450	450	450	450	450	450	400	400	400	226	226	200
470	470	470	470	470	470	-	-	-	-	-	-
TC4i	TC4i	NL4i	NL4i	TC4i	TC4i	Mechanic	Mechanic	Mechanic	Mechanic	Mechanic	Mechanic
√	√	√	√	√	√	-	-	-	-	-	-
√	√	√	√	√	√	-	-	-	-	-	-
Metallic	Metallic	Metallic	Metallic	Metallic	Metallic	Metallic	Metallic	Metallic	Metallic	Metallic	Metallic
2	2	2	3	3	2	2	2	2	2	2	1
-	-	-	-	-	-	-	-	-	-	-	-
SSLED	SSLED	EcoLed	EcoLed	EcoLed	EcoLed	EcoLed	EcoLed	EcoLed	CSLED	CSLED	EcoLed
√	√	√	√	√	√	-	-	-	-	-	-
1	1	2	2	2	2	2	2	2	1	1	2
550	550	550	550	550	550	550	550	550	550	550	550
650	650	650	650	650	650	650	650	650	650	650	650
BOTH	BOTH	BOTH	BOTH	BOTH	BOTH	BOTH	BOTH	BOTH	BOTH	BOTH	BOTH
√	√	√	√	√	√	√	√	√	√	√	√
285	285	287	287	287	287	207	207	207	123	123	102
220-240	220-240	220-240	220-240	220-240	220-240	220-240	220-240	220-240	220-240	220-240	220-240
50	50	50	50	50	50	50	50	50	50	50	50
CLASS II	CLASS II	CLASS II	CLASS II	CLASS II	CLASS II	CLASS II	CLASS II	CLASS II	CLASS I	CLASS I	CLASS II
EU - 2 pins	EU - 2 pins	EU - 2 pins	EU - 2 pins	EU - 2 pins	EU - 2 pins	EU - 2 pins	EU - 2 pins	EU - 2 pins	-	-	EU - 2 pins
-	-	-	-	-	-	-	-	-	-	-	-
-	-	-	-	-	-	-	-	-	-	-	-
-	-	-	-	-	-	-	-	-	-	-	-
-	-	-	-	-	-	-	-	-	-	-	-
02832004	02832004	02832004	02832004	02832004	02832004	02832004	02832004	02832004	-	-	02832004
		-	-	-	-	-	-	-	-	-	-
65300315	65300310	02811000	02811000	02811000	02811000	02811000*	02811000*	02811000*	02800988	02800987	02894010
		02811003	02811003	02811003	02811003	02811003	02811003	02811003	-	-	-
02859392	02859392	02859398	02859398	02859398	02859398	02859398	02859398	02859398	02859500	02859500	02859394
02893002	02893002	02893002	02893002	02893002	02893002	02893002	02893002	02893002	02893002	02893002	02893002

Code	02130005	02130302	02039305	02039005	02010203	02010305	02010300	02010301
EAN	8422248082709	8422248082716	8422248087377	8422248087384	8422248061940	8422248069588	8422248082365	8422248082396
Model	G 50 LUX GWH	G 50 LUX X	G-45 X	G-45 WH	TFH-7600 GWH	TFH-7600 X	TFH 6630 X	TFH 6630 WH
Type	Canopy	Canopy	Canopy	Canopy	Telescopic	Telescopic	Telescopic	Telescopic
Product fiche according to directives EU65/2014 - EN61591, EN60704-2-13, EN50564								
AEC (Anual Energy consumption) (kWh/annum)	49	49	48,6	48,6	32,2	32,2	19,3	19,3
EEI class (Energy Efficiency Class)	C	C	C	C	A	A	A+	A+
FDE (Fluid Dynamic Efficiency)	9,8	9,8	11,7	11,7	28,5	28,5	34,4	34,4
FDE class (Fluid Dynamic Efficiency Class)	E	E	E	E	A	A	A	A
LE (Lighting Efficiency) (lux/W)	36	36	8,4	8,4	36	36	21,9	21,9
LE class (Lighting Efficiency Class)	A	A	E	E	A	A	B	B
GFE (Grease Filtering Efficiency)	74,6	74,6	63	63	91,2	91,2	66,4	66,4
GFE Class (Grease Filtering Efficiency class)	D	D	E	E	B	B	D	D
Air flow at minimum speed (m3/h)	210	210	162	162	200	200	210	210
Air flow at maximum speed (m3/h)	400	400	335	335	525	645	410	410
Air flow at intensive speed (TURBO) (m3/h)	-	-	-	-	710	820	605	605
Sound Power Level at minimum speed (dB)	50	50	57	57	40	40	47	47
Sound Power Level at maximum speed (dB)	62	62	62	62	64	64	64	64
Sound Power Level at intensive speed (TURBO) (dB)	-	-	-	-	67	67	70	70
Po (Power Consumption in off mode) (W)	0	0	0	0	0,41	0,45	0,4	0,4
Ps (Power Consumption in standby) (W)	0	0	0	0	0	0	0	0
Integration directive EU 66/2014								
f (Time Increase Factor)	1,6	1,6	1,6	1,6	1	1	0,8	0,8
EEI (Energy Efficiency Index)	82,6	82,6	81,7	81,7	52,8	52,8	39,2	39,2
QBEP (Flow Rate at Best Efficiency Point) (m3/h)	208,6	208,6	185,2	185,2	348,4	348,4	275,2	275,2
PBEP (Static Pressure Difference at Best Efficiency Point) (Pa)	123	123	159	159	224	224	263	263
WBEP (Electric Power Input at Best Efficiency Point) (W)	72,9	72,9	69,4	69,4	76,1	76,1	58,6	58,6
WL (Nominal Power Consumption of Lighting system) (W)	7	7	11	11	7	7	3	3
EMIDDLE (Average Illumination of Lighting system on Cooking surface) (lux)	252	252	93	93	252	252	67	67
External Dimensions								
Width (mm)	530	530	510	510	600	600	600	600
Depth (mm)	310	310	302	302	280	280	300	300
Total max height(mm	172	172	170	170	271	271	221,5	221,5
Total min height(mm	172	172	170	170	271	271	221,5	221,5
Outlet Diameter (mm)	150/125	150/125	120	120	150/125	150/125	150	150
Characteristics								
Motor	K7 PLUS	K7 PLUS	TF 2003	TF 2003	BTDCA	BTDCA	T1DC	T1DC
Extraction Levels	3	3	2	2	4+1	4+1	5 + 1	5 + 1
Motor Maximum Power Consumption	95	95	100	100	130	130	90	90
Maximum Pressure	200	200	194	194	455	455	250	250
Intensive Speed (TURBO) Pressure	-	-	-	-	470	470	315	315
Control Type	Mechanic	Mechanic	Slider	Slider	TC5i	NL5i	TCD6i	TCD6i
Automatic shut-down timer	-	-	-	-	√	√	√	√
Electronic Filter Saturation Indicator	-	-	-	-	√	√	√	√
Filter Type	Metallic	Metallic	Metallic	Metallic	Metallic	Metallic	Metallic	Metallic
Anti-grease Filter Number	1	1	1	1	2	2	2	2
Inner Shield	-	-	-	-	√	√	-	-
Lighting								
Light Type	EcoLed	EcoLed	LED E-14	LED E-14	Ecoled	Ecoled	SS Led	SS Led
Adjustable Intensity Lighting	-	-	-	-	√	√	√	√
Nº of Lamps	2	2	2	2	2	2	1	1
Installation								
Minimum height distance to a electric worktop hob (mm)	550	550	550	550	550	550	550	550
Minimum height distance to a gas worktop hob (mm)	650	650	650	650	650	650	650	650
Instalation with Outlet tube to the exterior / Recirculating	BOTH	BOTH	BOTH	BOTH	BOTH	BOTH	BOTH	BOTH
Easy Instalation System	√	√	√	√	√	√	√	√
Electric Connection								
Total Rush Power (W)	102	102	111	111	137	137	93	93
Rated Voltage (V)	220-240	220-240	220-240	220-240	220-240	220-240	220-240	220-240
Network Frequency (Hz)	50	50	50	50	50	50	50	50
Electrical Insulation Class	CLASS II	CLASS II	CLASS I	CLASS I	CLASS II	CLASS II	CLASS I	CLASS I
Plug	EU - 2 pins	EU - 2 pins	-	-	EU - 2 pins	EU - 2 pins	-	-
Accessories								
Upper Decorative tube Extension	-	-	-	-	-	-	-	-
White Decorative Tube	-	-	-	-	-	-	-	-
Black Decorative Tube	-	-	-	-	-	-	-	-
Island Tube Enhancer	-	-	-	-	-	-	-	-
Check Valve	02832004	02832004	02849003	02849003	02832004	02832004	02832004	02832004
MAX PRO Metal Filter	-	-	-	-	-	-	-	-
Metal Filter	02894010	02894010	02808000*	02808000*	02825272*	02825272*	02825279	02825279
DUAL Filter (metal + active charcoal)	-	-	-	-	-	-	-	-
Active Charcoal Filter	02859394	02859394	02825263	02825263	02825263	02825263	02859394	02859394
Noiseless Flexible Duct	02893002	02893002	-	-	02893002	02893002	02893002	02893002

02010302	02010608	02010008	02010408	02017202	02017203	02094305	02089305	02017305	02017306	02034310	02034501
8422248082402	8422248105750	8422248105736	8422248105767	8422248062008	8422248062015	8422248061964	8422248061971	8422248061988	8422248068819	8422248082129	8422248082136
TFH 6630 BK	TFH 6430 X	TFH 6430 GWH	TFH 6430 GBK	TF-2003 600 GWH /A	TF-2003 600 GBK /B	TF-2003 DURALUM 900	TF-2003 DURALUM 700	TF-2003 DURALUM 600	TF-2003 600 X	TF-5260 X	TF-5260 WH
Telescopic	Telescopic	Telescopic	Telescopic	Telescopic	Telescopic	Telescopic	Telescopic	Telescopic	Telescopic	Telescopic	Telescopic
19,3	21,6	21,6	21,6	44,5	44,5	46,3	44,5	44,5	44,5	78,3	78,3
A+	A+	A+	A+	C	C	C	C	C	C	D	D
34,4	30,4	30,4	30,4	11,9	11,9	10,1	11,9	11,9	11,9	9	9
A	A	A	A	E	E	E	E	E	E	E	E
21,9	27	27	27	36	36	36	36	36	36	9,3	9,3
B	B	B	B	A	A	A	A	A	A	E	E
66,4	60	60	60	68	68	68	68	68	68	66,5	66,5
D	E	E	E	D	D	D	D	D	D	D	D
210	134,6	134,6	134,6	150	150	150	150	150	150	174,8	174,8
410	274,1	274,1	274,1	390	390	390	390	390	390	325,1	325,1
605	410,3	410,3	410,3	-	-	-	-	-	-	-	-
47	48	48	48	45	45	45	45	45	45	54	54
64	62	62	62	57	57	57	57	57	57	68	68
70	70	70	70	-	-	-	-	-	-	-	-
0,4	0,3	0,3	0,3	0	0	0	0	0	0	0	0
0	-	-	-	0	0	0	0	0	0	0	0
0,8	0,9	0,9	0,9	1,6	1,6	1,6	1,6	1,6	1,6	1,7	1,7
39,2	44,2	44,2	44,2	78,2	78,2	81,1	78,2	78,2	78,2	93,5	93,5
275,2	234,6	234,6	234,6	198,2	198,2	201,1	198,2	198,2	198,2	198	198
263	266	266	266	148	148	125	148	148	148	185	185
58,6	57	57	57	68,6	68,6	69	68,6	68,6	68,6	113,3	113,3
3	4	4	4	7	7	7	7	7	7	11	11
67	108	108	108	252	252	252	252	252	252	102	102
600	600	600	600	600	600	900	700	600	600	600	600
300	300	300	300	280	280	280	280	280	280	280	280
221,5	221,5	221,5	221,5	180	180	180	180	180	180	175	175
221,5	221,5	221,5	221,5	180	180	180	180	180	180	175	175
150	150	150	150	120	120	120	120	120	120	120	120
TIDC	K9DC	K9DC	K9DC	TF 2003	TF 2003	TF 2003	TF 2003	TF 2003	TF 2003	2 x L1N	2 x L1N
5 + 1	3+1	3+1	3+1	2	2	2	2	2	2	3	3
90	55	55	55	100	100	100	100	100	100	2 x 65	2 x 65
250	243	243	243	194	194	194	194	194	194	301	301
	362	362	362	-	-	-	-	-	-	-	-
TCD6i	TC TFH4i	TC TFH4i	TC TFH4i	Rocker Switch	Rocker Switch	Rocker Switch	Rocker Switch	Rocker Switch	Rocker Switch	Slider	Slider
√	√	√	√	-	-	-	-	-	-	-	-
√	√	√	√	-	-	-	-	-	-	-	-
Metallic	Metallic	Metallic	Metallic	Metallic	Metallic	Metallic	Metallic	Metallic	Metallic	Metallic	Metallic
2	2	2	2	2	2	2	2	2	2	2	2
-	-	-	-	√	√	√	√	√	√	-	-
SS Led	SS Led	SS Led	SS Led	Ecoled	Ecoled	Ecoled	Ecoled	Ecoled	Ecoled	LED E-14	LED E-14
√	√	√	√	-	-	-	-	-	-	-	-
1	1	1	1	2	2	2	2	2	2	2	2
550	550	550	550	550	550	550	550	550	550	550	550
650	650	650	650	650	650	650	650	650	650	650	650
BOTH	BOTH	BOTH	BOTH	BOTH	BOTH	BOTH	BOTH	BOTH	BOTH	BOTH	BOTH
√	√	√	√	√	√	√	√	√	√	√	√
93				107	107	107	107	107	107	141	141
220-240	220-240	220-240	220-240	220-240	220-240	220-240	220-240	220-240	220-240	220-240	220-240
50	50	50	50	50	50	50	50	50	50	50	50
CLASS I	CLASS I	CLASS I	CLASS I	CLASS I	CLASS I	CLASS I	CLASS I	CLASS I	CLASS I	CLASS II	CLASS II
-	-	-	-	-	-	-	-	-	-	EU 2 Pins	EU 2 Pins
-	-	-	-	-	-	-	-	-	-	-	-
-	-	-	-	-	-	-	-	-	-	-	-
-	-	-	-	-	-	-	-	-	-	-	-
-	-	-	-	-	-	-	-	-	-	-	-
02832004	02832004	02832004	02832004	02849003	02849003	02849003	02849003	02849003	02849003	02849002	02849002
-	-	-	-	-	-	-	-	-	-	-	-
02825279	02825279	02825279	02825279	02825272*	02825272*	02825273*	02825274*	02825272*	02825272*	02825270	02825270
-	-	-	-	-	-	-	-	-	-	-	-
02859394	02859394	02859394	02859394	02825263	02825263	02825263	02825263	02825263	02825263	02846762	02846762
02893002	02893002	02893002	02893002	-	-	-	-	-	-	-	-

Code	02034606	02034107	02034408	02097305	02097002	02097306	02033309	02001301	02011317
EAN	8422248101998	8422248102001	8422248108096	8422248086264	8422248086271	8422248102018	8422248086059	8422248062039	8422248105231
Model	TFB-5160 X	TFB-5160 WH	TFB-5160 BK	TF-5250 X	TF-5250 WH	TFB-5150 X	TF-5060 X	S-BOX X	LF-2060 X
Type	Telescopic	Telescopic	Telescopic	Telescopic	Telescopic	Telescopic	Telescopic	Standard	Standard
Product fiche according to directives EU65/2014 - EN61591, EN60704-2-13, EN50564									
AEC (Anual Energy consumption) (kWh/annum)	36,5	36,5	36,5	78,3	78,3	31,1	38,5	52,5	45,1
EEI class (Energy Efficiency Class)	C	C	C	D	D	C	C	C	C
FDE (Fluid Dynamic Efficiency)	8,86	8,86	8,86	9	9	11,7	10,4	11,9	9,4
FDE class (Fluid Dynamic Efficiency Class)	E	E	E	E	E	E	E	E	E
LE (Lighting Efficiency) (lux/W)	43,9	43,9	43,9	9,3	9,3	46	11,8	4,9	14,5
LE class (Lighting Efficiency Class)	A	A	A	E	E	A	E	F	D
GFE (Grease Filtering Efficiency)	60,6	60,6	60,6	66,5	66,5	62,6	59,6	68	79,6
GFE Class (Grease Filtering Efficiency class)	E	E	E	D	D	E	E	D	C
Air flow at minimum speed (m3/h)	158,4	158,4	158,4	174,8	174,8	179,6	95,8	150	107,5
Air flow at maximum speed (m3/h)	297,2	297,2	297,2	325,1	325,1	319,6	196,8	390	195,6
Air flow at intensive speed (TURBO) (m3/h)	-	-	-	-	-	-	-	-	-
Sound Power Level at minimum speed (dB)	47,8	47,8	47,8	54	54	51	46	45	56
Sound Power Level at maximum speed (dB)	61,1	61,1	61,1	68	68	62	62	57	69
Sound Power Level at intensive speed (TURBO) (dB)	-	-	-	-	-	-	-	-	-
Po (Power Consumption in off mode) (W)	0	0	0	0	0	0	0	0	0
Ps (Power Consumption in standby) (W)	-	-	-	0	0	-	0	0	0
Integration directive EU 66/2014									
ƒ (Time Increase Factor)	1,68	1,68	1,68	1,7	1,7	1,6	1,6	1,6	1,7
EEI (Energy Efficiency Index)	76,34	76,34	76,34	93,5	93,5	70,2	75,8	83,4	82,4
QBEP (Flow Rate at Best Efficiency Point) (m3/h)	158,4	158,4	158,4	198	198	173,7	122,6	198,2	116,2
PBEP (Static Pressure Difference at Best Efficiency Point) (Pa)	115,03	115,03	115,03	185	185	123	180	148	192
WBEP (Electric Power Input at Best Efficiency Point) (W)	57,11	57,11	57,11	113,3	113,3	50,8	59,1	68,6	66,2
WL (Nominal Power Consumption of Lighting system) (W)	2	2	2	11	11	2	5,5	18	5,5
EMIDDLE (Average Illumination of Lighting system on Cooking surface) (lux)	87,8	87,8	87,8	102	102	92	65	89	80
External Dimensions									
Width (mm)	595	595	595	600	600	495	600	600	600
Depth (mm)	297	297	297	280	280	297	280	500	452
Total max height(mm	200	200	200	175	175	200	175	142	85
Total min height(mm	225	225	225	175	175	225	175	142	85
Outlet Diameter (mm)	150	150	150	120	120	150	120	120	120
Characteristics									
Motor	TT300	TT300	TT300	2 x L1N	2 x L1N	TT300	1 x L1N	TF 2003	L1N
Extraction Levels	2	2	2	3	3	2	3	3	3
Motor Maximum Power Consumption	65	65	65	2 x 65	2 x 65	65	65	100	65
Maximum Pressure	170	170	170	301	301	170	205	194	325
Intensive Speed (TURBO) Pressure	-	-	-	-	-	-	-	-	-
Control Type	Rocker Switch	Rocker Switch	Rocker Switch	Slider	Slider	Rocker Switch	Slider	Mechanic	Mechanic
Automatic shut-down timer	-	-	-	-	-	-	-	-	-
Electronic Filter Saturation Indicator	-	-	-	-	-	-	-	-	-
Filter Type	Metallic	Metallic	Metallic	Metallic	Metallic	Metallic	Metallic	Metallic	Metallic
Anti-grease Filter Number	2	2	2	2	2	2	2	2	2
Inner Shield	-	-	-	-	-	√	-	-	-
Lighting									
Light Type	CSLED	CSLED	CSLED	LED E-14	LED E-14	CSLED	LED E-14	E-14 9W	LED E-14
Adjustable Intensity Lighting	-	-	-	-	-	-	-	-	-
Nº of Lamps	1	1	1	2	2	1	1	2	1
Installation									
Minimum height distance to a electric worktop hob (mm)	550	550	550	550	550	550	550	550	550
Minimum height distance to a gas worktop hob (mm)	650	650	650	650	650	650	650	650	650
Instalation with Outlet tube to the exterior / Recirculating	BOTH	BOTH	BOTH	BOTH	BOTH	BOTH	BOTH	BOTH	BOTH
Easy Instalation System	√	√	√	√	√	√	√	√	√
Electric Connection									
Total Rush Power (W)	67	67	67	141	141	67	70,5	118	65,5
Rated Voltage (V)	220-240	220-240	220-240	220-240	220-240	220-240	220-240	220-240	220-240
Network Frequency (Hz)	50 / 60	50 / 60	50 / 60	50	50	50 / 60	50	50	50
Electrical Insulation Class	CLASS I	CLASS I	CLASS I	CLASS II	CLASS II	CLASS I	CLASS II	CLASS I	CLASS I
Plug	VDE	VDE	VDE	EU 2 Pins	EU 2 Pins	VDE	EU 2 Pins	-	-
Accessories									
Upper Decorative tube Extension	-	-	-	-	-	-	-	-	-
White Decorative Tube	-	-	-	-	-	-	-	-	-
Black Decorative Tube	-	-	-	-	-	-	-	-	-
Island Tube Enhancer	-	-	-	-	-	-	-	-	-
Check Valve	-	-	-	02849002	02849002	-	02849002	02849003	02849002
MAX PRO Metal Filter	-	-	-	-	-	-	-	-	-
Metal Filter	02800981	02800981	02800981	02825270	02825270	02800977	02825270	02800912*	02833170
DUAL Filter (metal + active charcoal)	-	-	-	-	-	-	-	-	-
Active Charcoal Filter	02859495	02859495	02859495	02846762	02846762	02859495	02846762	02804300	02846764
Noiseless Flexible Duct	-	-	-	-	-	-	-	-	-

02011017	02011309	02015306	02011012	02015006	02011408	02014302	02026306	02026006	02028307	02096303	02028008	02096005
8422248105224	8422248082075	8422248086103	8422248082105	8422248086110	8422248083027	8422248168946	8422248085854	8422248085861	8422248086073	8422248086097	8422248086080	8422248086288
LF-2060 WH	F-2060 X	F-2050 X	F-2060 WH	F-2050 WH	F-2060 BK	F-2290 X	P-3260 X	P-3260 WH	P-3060 X	P-3050 X	P-3060 WH	P-3050 WH
Standard	Standard	Standard	Standard	Standard	Standard	Standard	Standard	Standard	Standard	Standard	Standard	Standard
45,1	44,7	44,7	44,7	44,7	44,7	-	58	58	39,1	39,1	38,8	38,8
C	C	C	C	C	C	-	D	D	C	C	C	C
9,4	9,2	9,2	9,2	9,2	9,2	-	9	9	11,2	11,2	10,2	10,2
E	E	E	E	E	E	-	E	E	E	E	E	E
14,5	27,3	27,3	27,3	27,3	27,3	-	15.7	15.7	12	12	12	12
D	B	B	B	B	B	-	D	D	D	D	D	D
79,6	67,7	67,7	67,7	67,7	67,7	-	68	68	72,7	72,7	69,9	69,9
C	D	D	D	D	D	-	D	D	D	D	D	D
107,5	107,5	107,5	107,5	107,5	107,5	-	200	200	93,7	93,7	94,7	94,7
195,6	193,5	193,5	193,5	193,5	193,5	-	325	325	191,1	191,1	192,4	192,4
-	-	-	-	-	-	-	-	-	-	-	-	-
56	56	56	56	56	56	-	60	60	46	46	46	46
69	68	68	68	68	68	-	67	67	63	63	63	63
-	-	-	-	-	-	-	-	-	-	-	-	-
0	0	0	0	0	0	-	0	0	0	0	0	0
0	0	0	0	0	0	-	0	0	0	0	0	0
1,7	1,7	1,7	1,7	1,7	1,7	-	1.7	1.7	1,6	1,6	1,6	1,6
82,4	82,2	82,2	82,2	82,2	82,2	-	88.5	88.5	76,1	76,1	75,9	75,9
116,2	105,2	105,2	105,2	105,2	105,2	-	177.4	177.4	104,6	104,6	101,9	101,9
192	209	209	209	209	209	-	147.6	147.6	233	233	216	216
66,2	201	201	201	201	201	-	81	81	60,5	60,5	60	60
5,5	5,5	5,5	5,5	5,5	5,5	-	11	11	5,5	5,5	5,5	5,5
80	150	150	150	150	150	-	172	172	66	66	66	66
600	600	600	600	600	600	900	600	600	600	500	600	500
452	470	470	470	470	470	470	450	450	450	450	450	450
85	112	112	112	112	112	150	120	120	120	120	120	120
85	112	112	112	112	112	150	120	120	120	120	120	120
120	120	120	120	120	120	120	120	120	120	120	120	120
L1N	L1N	L1N	L1N	L1N	L1N	TF	L1	L1	L1N	L1N	L1N	L1N
3	3	3	3	3	3	3	3	3	3	3	3	3
60	65	60	60	60	60	2 x 125	2 x 70	2 x 70	60	60	60	60
325	325	325	325	325	325	179	247	247	325	325	325	325
-	-	-	-	-	-	-	-	-	-	-	-	-
Mechanic	Mechanic	Mechanic	Mechanic	Mechanic	Mechanic	Slider	Mechanic	Mechanic	Mechanic	Mechanic	Mechanic	Mechanic
-	-	-	-	-	-	-	-	-	-	-	-	-
-	-	-	-	-	-	-	-	-	-	-	-	-
Metallic	Aluminium Mesh	Aluminium Mesh	Aluminium Mesh	Aluminium Mesh	Aluminium Mesh	Aluminium Mesh	Metallic	Aluminium Mesh	Metallic	Aluminium Mesh	Aluminium Mesh	Aluminium Mesh
2	1	1	1	1	1	1	2	1	2	1	1	1
-	-	-	-	-	-	-	-	-	-	-	-	-
LED E-14	LED E-14	LED E-14	LED E-14	LED E-14	LED E-14	Halogen E-14	LED E-14	LED E-14	LED E-14	LED E-14	LED E-14	LED E-14
-	-	-	-	-	-	-	-	-	-	-	-	-
1	1	1	1	1	1	2	2	2	1	1	1	1
550	550	550	550	550	550	550	550	550	550	550	550	550
650	650	650	650	650	650	650	650	650	650	650	650	650
BOTH	BOTH	BOTH	BOTH	BOTH	BOTH	BOTH	BOTH	BOTH	BOTH	BOTH	BOTH	BOTH
√	√	√	√	√	√	√	√	√	√	√	√	√
65,5	65,5	65,5	65,5	65,5	65,5	306	151	151	65,5	65,5	65,5	65,5
220-240	220-240	220-240	220-240	220-240	220-240	220-240	220-240	220-240	220-240	220-240	220-240	220-240
50	50	50	50	50	50	50	50	50	50	50	50	50
CLASS I	CLASS I	CLASS I	CLASS I	CLASS I	CLASS I	CLASS II	CLASS I	CLASS I	CLASS I	CLASS I	CLASS I	CLASS I
-	-	-	-	-	-	EU 2 Pins	-	-	-	-	-	-
-	-	-	-	-	-	-	-	-	-	-	-	-
-	-	-	-	-	-	-	-	-	-	-	-	-
-	-	-	-	-	-	-	-	-	-	-	-	-
-	-	-	-	-	-	-	-	-	-	-	-	-
02849002	02849002	02849002	02849002	02849002	02849002	02849002	02849002	02849002	02849002	02849002	02849002	02849002
-	-	-	-	-	-	-	-	-	-	-	-	-
02833170	02833162	02833162	02833162	02833162	02833162	02833162	02803263	02803260	02803263	02803053	02803260	02803053
-	-	-	-	-	-	-	-	-	-	-	-	-
02846764	02846764	02846764	02846764	02846764	02846764	02846764	02846762	02846762	02846764	02846764	02846764	02846764
-	-	-	-	-	-	-	-	-	-	-	-	-

Code	07047400	07002411	07002412	07001006	07001507	07001005	07034410	07001403	07034602
EAN	8422248080637	8422248094009	8422248094016	8422248103350	8422248095464	8422248095587	8422248093941	8422248095594	8422248095556
Model	MT 9011 PRO BK	MT 8012 BK	MT 8012 WH	PR 6011 XGBK	MDS 7208 X	MDS 7208 WH	MD 8008 BK	MDS 7208 BK	MDS 7206 X
Type	Multifunction Turbo	Multifunction Turbo	Multifunction Turbo	Multifunción PYRO	Multifunction Turbo	Multifunction Turbo	Multifunction Turbo	Multifunction Turbo	Multifunction
Product fiche according to EU 65/2014 y EU 66/2014									
Energy efficiency index (IEE)	86,6	86,6	86,6	94	95	95	117,1 / 106,6	95	95
Energy efficiency Class	A	A	A	A	A	A	A	A	A
Energy consumption in conventional mode [kWh/cycle]	0,71	0,71	0,71	0,99	0,85	0,85	0,82	0,85	0,85
Energy consumption in fan-forced mode [kWh/cycle]	0,81	0,81	0,81	0,79	0,81	0,81	0,79	0,81	0,81
Number of cavities	1	1	1	1	1	1	1	1	1
Heat source	Electricity	Electricity	Electricity	Electricity	Electricity	Electricity	Electricity	Electricity	Electricity
Mass of the appliance [Kg]	39,5	39,5	39,5	39	26,9	26,9	36	26,9	26,9
Cavity volume (L)	72	72	72	70	72	72	72	72	72
Dimensions									
Width [mm]	595	595	595	595	595	595	595	595	595
Height [mm]	595	595	595	595	595	595	595	595	595
Depth [mm]	568	568	568	575	547	547	568	547	547
Cavity width [mm]	346,5	346,5	346,5	487	476	476	346,5	476	476
Cavity height [mm]	457	457	457	350	372	372	457	372	372
Cavity depth [mm]	410	410	410	420	407	407	410	407	407
Characteristics									
Finishing	Black glass	Black glass	White glass	Stainles steel and black glass	Stainles steel and black glass	White glass	Black glass	Black glass	Stainles steel and black glass
Soft Door closing	Yes	Yes	Yes	No	Yes	Yes	No	Yes	No
Tray levels	5	5	5	5	5	5	5	5	5
Convection Fan	Yes	Yes	Yes	Yes	Yes	Yes	Yes	Yes	Yes
Number of light bulbs	1	1	1	1	1	1	1	1	1
Controls									
Oven control	Electronic	Electronic	Electronic	Electronic	Electronic	Electronic	Electronic	Electronic	Electronic
Control type	Tactile digital screen 5"	Touch control	Touch control	Touch with push-pull knobs	Touch with push-pull knobs	Touch with push-pull knobs	Touch control	Touch with push-pull knobs	Touch with push-pull knobs
Screen Technology	TFT	LCD	LCD	White LCD	White LCD	White LCD	LCD	White LCD	White LCD
Cooking programmer start/stop	Yes	Yes	Yes	Yes	Yes	Yes	Yes	Yes	Yes
Cooking programmer stop	-	-	-	Yes	-	-	-	-	-
Minute minder	-	-	-	-	-	-	-	-	-
Working pilot light	Yes	Yes	Yes	-	Yes	Yes	No	Yes	Yes
Thermostat pilot light	Yes	Yes	Yes	Yes	Yes	Yes	Yes	Yes	Yes
Min. temperature [°C]	50	50	50	50	50	50	50	50	50
Max. Temperature [°C]	250	250	250	250	250	250	250	250	250
Cleaning									
Enamel	Non-stick black	Non-stick black	Non-stick black	black pyrolytic	Non-stick black	Non-stick black	Non-stick black	Non-stick black	Non-stick black
Cavity type	Flat	Flat	Flat	Flat	Flat	Flat	Flat	Flat	Flat
Inner glass	Removable	Removable	Removable	Removable	Removable	Removable	Removable	Removable	Removable
AquaSmart Cleaning	Automatic	Automatic	Automatic	Manual	Manual	Manual	Manual	Manual	Manual
Number of programmes	14	12	12	11	8	8	8	8	6
Fast preheat	Yes	Yes	Yes	No	Manual	Manual	No	Manual	Yes
Inner light	Yes	Yes	Yes	Yes	Yes	Yes	Yes	Yes	Yes
Safety									
Safety lock	Yes	Yes	Yes	Yes	Yes	Yes	No	Yes	Yes
Number of door glasses	3	3	3	4	3	3	3	3	2
Cooling fan	Yes	Yes	Yes	Yes	Yes	Yes	Yes	Yes	Yes
Security Thermostat	Yes	Yes	Yes	Yes	Yes	Yes	Yes	Yes	Yes
Electrical connection									
Grill power [W]	2250	2250	2250	2000	1200 + 1400	1200 + 1400	2250	1200 + 1400	1200 + 1400
Bottom heating element power [W]	1100	1100	1100	1100	1100	1100	1100	1100	1100
Back heating element power [W]	2000	2000	2000	2000	1600	1600	2000	1600	-
Total rated Power [W]	2380	2380	2380	3200	2650	2650	2380	2650	2650
Nominal voltage [V] / Mains frequency [Hz]	230-240 / 50-60	230-240 / 50-60	230-240 / 50-60	220-240 / 50/60	220-240 / 50/60	220-240 / 50/60	230-240 / 50-60	220-240 / 50/60	220-240 / 50/60
Light power [W]	25	25	25	25	15	15	25	15	15
Power cord length [m]	1	1	1	1	1,4	1,4	1	1,4	1,4
Plug	No	No	No	Yes	Yes	Yes	No	Yes	Yes
Accessories									
Side racks	1	1	1	1	1	1	1	1	1
Grill	1	1	1	1	1	1	1	1	1
Shallow tray	1	1	1	1	1	1	1	1	-
Deep tray	1	1	1	-	1	1	1	1	1
Sliding rails	1	1	1	1	1	1	1	1	1
Turnspit	-	-	-	-	-	-	-	-	-
Pizza Stone (optional)	Yes	Yes	Yes	-	-	-	Yes	-	-
Gas connection hose	-	-	-	-	-	-	-	-	-

07034404	07033303	07034100	07034506	07034601	07044606	07007303	07044605	07044101	07044600	07044603	07044408	07044100
8422248081849	8422248076029	8422248095563	8422248095570	8422248095457	8422248095440	8422248075886	8422248095433	8422248095549	8422248075831	8422248095426	8422248095532	8422248095525
ME 7207 BK	**MD6106X**	**MDS 7206 WH**	**MDS 7206 BK**	**MDS 7205 X**	**MES 7106 X**	**ME6206X**	**SES 7104 X**	**SES 7104 WH**	**SE6204X**	**SES 7004 X**	**SES 7004 BK**	**SES 7004 WH**
Multifunction		**Multifunction**	**Multifunction**	**Multifunction**	**Multifunction**		**Static**	**Static**		**Static**	**Static**	**Static**
95	117,1 / 106,6	95	95	95	95	102	95	95	117,1	92,7	92,7	92,7
A	A	A	A	A	A	A	A	A	A	A	A	A
0,78	0,82	0,85	0,85	0,85	0,85	0,81	0,83	0,83	0,79	0,79	0,79	0,79
0,79	0,79	0,81	0,81	0,81	0,81	0,89	-	-	-	-	-	-
1	1	1	1	1	1	1	1	1	1	1	1	1
Electricity	Electricity	Electricity	Electricity	Electricity	Electricity	Electricity	Electricity	Electricity	Electricity	Electricity	Electricity	Electricity
30	28	26,9	26,9	26,9	26,9	28	26,9	26,9	28	26,9	26,9	26,9
72	60	72	72	72	72	60	77	77	65	72	72	72
595	595	595	595	595	595	595	595	595	595	595	595	595
595	595	595	595	595	595	595	595	595	595	595	595	595
568	507	547	547	547	547	507	547	547	528	547	547	547
346,5	450	476	476	476	476	450	476	476	450	439	439	439
457	330	372	372	372	372	330	372	372	330	372	372	372
410	440	407	407	407	407	410	437	437	440	437	437	437
Black Glass	Stainles steel and black glass	White glass	Black glass	Stainles steel and black glass	Stainles steel and black glass	Stainles steel and black glass	Stainles steel and black glass	White glass	Stainles steel and black glass	Stainles steel and black glass	Black glass	White glass
No	No	No	No	No	No	No	No	No	No	No	No	No
5	5	5	5	5	5	5	5	5	5	5	5	5
Yes	Yes	Yes	Yes	Yes	Yes	Yes	No	No	No	No	No	No
1	1	1	1	1	1	1	1	1	1	1	1	1
Mechanic	Electronic	Electronic	Electronic	Electronic	Mechanic	Mechanic	Mechanic	Mechanic	Mechanic	Mechanic	Mechanic	Mechanic
Knobs	Touch control	Touch with push-pull knobs	Touch with push-pull knobs	Touch control with knobs	Knobs	Knobs	Knobs	Knobs	Knobs	Knobs	Knobs	Knobs
-	-	White LCD	White LCD	White LCD	-	-	-	-	-	-	-	-
Yes	Yes	Yes	Yes	Yes	-	-	-	-	-	-	-	-
Yes	Yes	-	-	-	-	Yes	-	-	Yes	-	-	-
-	-	-	-	-	Yes	-	Yes	Yes	-	-	-	-
No	No	Yes	Yes	Yes	No	No	No	No	No	No	No	No
Yes	Yes	Yes	Yes	Yes	Yes	Yes	Yes	Yes	Yes	Yes	Yes	Yes
50	50	50	50	50	50	50	50	50	50	50	50	50
	250	250	250	250	250	250	250	250	250	250	250	250
Non-stick black	Non-stick black	Non-stick black	Non-stick black	Non-stick black	Non-stick black	Non-stick black	Non-stick black	Non-stick black	Non-stick black	Non-stick black	Non-stick black	Non-stick black
Flat	Embossed	Flat	Flat	Flat	Flat	Flat	Flat	Flat	Embossed	Embossed	Embossed	Embossed
Removable	Removable	Removable	Removable	Removable	Removable	Removable	Removable	Removable	Removable	Removable	Removable	Removable
Manual	Manual	Manual	Manual	Manual	Manual	Manual	Manual	Manual	Manual	Manual	Manual	Manual
6	6	6	6	6	6	7	4	4	4	4	4	4
Yes	No	Yes	Yes	Yes	Yes	No	Manual	Manual	No	Manual	Manual	Manual
No	Yes	Yes	Yes	Yes	Yes	Yes	Yes	Yes	Yes	Yes	Yes	Yes
No	No	Yes	Yes	Yes	Yes	No	Yes	Yes	No	Yes	Yes	Yes
2	2	2	2	2	2	2	2	2	2	2	2	2
Yes	Yes	Yes	Yes	Yes	Yes	Yes	Yes	Yes	No	Yes	Yes	Yes
Yes	Yes	Yes	Yes	Yes	Yes	Yes	Yes	Yes	Yes	Yes	Yes	Yes
900+1350	2250	1200 + 1400	1200 + 1400	1200 + 1400	1200 + 1400	2250	1200 + 1400	1200 + 1400	1600	1200 + 1400	1200 + 1400	1200 + 1400
1100	1100	1100	1100	1100	1100	1100	1100	1100	900	1100	1100	1100
-	-	-	-	-	-	-	-	-	-	-	-	-
2380	2180	2650	2650	2650	2650	2180	2650	2650	2180	2650	2650	2650
220-240 / 50/60	220-240 / 50/60	220-240 / 50/60	220-240 / 50/60	220-240 / 50/60	220-240 / 50/60	220-240 / 50/60	220-240 / 50/60	220-240 / 50/60	220-240 / 50/60	220-240 / 50/60	220-240 / 50/60	220-240 / 50/60
15	15	15	15	15	15	15	15	15	15	15	15	15
1,4	1,4	1,4	1,4	1,4	1,4	1,4	1,4	1,4	1,4	1,4	1,4	1,4
no	No	Yes	Yes	Yes	Yes	No	Yes	Yes	No	Yes	Yes	Yes
1	1	1	1	1	1	1	1	1	-	-	-	-
1	1	1	1	1	1	1	1	1	1	1	1	1
-	1	-	-	-	-	-	-	-	-	1	1	1
1	-	1	1	1	1	1	1	1	1	-	-	-
-	-	1	1	-	1	-	-	-	-	-	-	-
-	-	-	-	-	-	-	-	-	-	-	-	-
-	-	-	-	-	-	-	-	-	-	-	-	-
-	-	-	-	-	-	-	-	-	-	-	-	-

Code	07035409	07035009	07003307	07003000	07003305	07039305	07001401	07032307	07032002
EAN	8422248077026	8422248077033	8422248067881	8422248067898	8422248067867	8422248093156	8422248059503	8422248059497	8422248058568
Model	MRA7108BK	MRA7108WH	CMD5008X	MD 5008 WH	ME4006X	CMD 9208 BK	CDP 780 AS BK	CM 760 AS BK	CM 760 AS WH
Type	Multifunción	Multifunción	Multifunction Turbo	Multifunction Turbo	Multifunción	Multifunction Turbo	Multifunction Turbo	Multifunción	Multifunción
Product fiche according to EU 65/2014 y EU 66/2014									
Energy efficiency index (IEE)	93,8	93,8	97,2	97,2	97,2	94	117,1	117,1	117,1
Energy efficiency Class	A	A	A	A	A	A	A	A	A
Energy consumption in conventional mode [kWh/cycle]	0,76	0,76	0,7	0,7	0,7	1,15	0,89	0,89	0,89
Energy consumption in fan-forced mode [kWh/cycle]	0,75	0,75	0,71	0,71	0,71	0,9	0,81	0,81	0,81
Number of cavities	1	1	1	1	1	1	1	1	1
Heat source	Electricity	Electricity	Electricity	Electricity	Electricity	Electricity	Electricity	Electricity	Electricity
Mass of the appliance [Kg]	28	28	30,4	30,4	30,4	47,4	36	35	35
Cavity volume (L)	60	60	40	40	40	93	50	50	50
Dimensions									
Width [mm]	595	595	456	456	456	895	595	595	595
Height [mm]	595	595	595	595	595	480	595	595	595
Depth [mm]	565	565	502	502	502	546	480	480	480
Cavity width [mm]	472	472	260	260	260	658	410	410	410
Cavity height [mm]	316	316	450	450	450	345	325	325	325
Cavity depth [mm]	400	400	456	456	456	410	375	375	375
Characteristics									
Finishing	Black glass	White glass	Stainless steel	White glass	Stainless steel	Black glass	Stainles steel and black glass	Stainles steel and black glass	Stainles steel and white glass
Soft Door closing	No	No	No	No	No	No	No	No	No
Tray levels	5	5	4	4	4	5	5	5	5
Convection Fan	Yes	Yes	Yes	Yes	Yes	Yes	Yes	Yes	Yes
Number of light bulbs	1	1	1	1	1	2	1	1	1
Controls									
Oven control	Mechanic	Mechanic	Electronic	Electronic	Mechanic	Electronic	Electronic	Mechanic	Mechanic
Control type	Knobs	Knobs	Touch with push-pull knobs	Touch with push-pull knobs	Knobs	Touch with push-pull knobs	Touch with push-pull knobs	Knobs	Knobs
Screen Technology	-	-	LCD	LCD	-	LCD	LCD	-	-
Cooking programmer start/stop	-	-	Yes	Yes	-	No	Yes	No	No
Cooking programmer stop	-	-	-	-	-	Yes	-	No	No
Minute minder	Yes	Yes	-	-	No	No	-	No	No
Working pilot light	No	No	Yes	Yes	Yes	Yes	Yes	Yes	Yes
Thermostat pilot light	Yes	Yes	Yes	Yes	Yes	Yes	Yes	Yes	Yes
Min. temperature [°C]	40	40	50	50	50	50	50	50	50
Max. Temperature [°C]	240	240	250	250	250	250	250	250	250
Cleaning									
Enamel	Non-stick black	Non-stick black	Non-stick black	Non-stick black	Non-stick black	Non-stick black	Non-stick black	Non-stick black	Non-stick black
Cavity type	Flat	Flat	Flat	Flat	Embossed	Flat	Flat	Embossed	Embossed
Inner glass	Removable	Removable	Fixed	Fixed	Fixed	Removable	Removable	Removable	Removable
AquaSmart Cleaning	No	No	Manual	Manual	Manual	No	Manual	Manual	No
Number of programmes	7	7	8	6	6	10	8	6	6
Fast preheat	No	No	No	No	No	No	No	No	No
Inner light	No	No	Yes	Yes	Yes	Yes	Yes	Yes	Yes
Safety									
Safety lock	No	No	No	No	No	Yes	No	No	No
Number of door glasses	2	2	3	3	3	3	2	2	2
Cooling fan	Yes	Yes	Yes	Yes	Yes	Yes	Yes	Yes	Yes
Security Thermostat	Yes	Yes	Yes	Yes	Yes	Yes	Yes	Yes	Yes
Electrical connection									
Grill power [W]	1000 + 2000	1000 + 2000	2200	2200	2200	900 + 1800	2350	2350	2350
Bottom heating element power [W]	1200	1200	1300	1300	1300	1500	1300	1300	1300
Back heating element power [W]	-	-	2300	2300	-	2500	2300	-	-
Total rated Power [W]	2300	2300	2380	2380	2380	2800	2450	2450	2450
Nominal voltage [V] / Mains frequency [Hz]	220-240 / 50/60	220-240 / 50/60	220-240 / 50/60	220-240 / 50/60	220-240 / 50/60	220-240 / 50/60	220-240 / 50/60	220-240 / 50/60	220-240 / 50/60
Light power [W]	15	15	25	25	25	2 x 25	2 x 25	25	25
Power cord length [m]	1,25	1,25	1	1	1	1,0	1,0	1	1
Plug	Yes	Yes	No	No	No	No	No	No	No
Accessories									
Side racks	1	1	1	1	-	1	1	-	-
Grill	1	1	1	1	1	1	1	1	1
Shallow tray	1	1	-	-	1	-	1	-	-
Deep tray	1	1	1	1	-	1	1	1	1
Sliding rails	-	-	1	1	-	-	1	-	-
Turnspit	-	-	-	-	-	-	-	-	-
Pizza Stone (optional)	-	-	-	-	-	-	-	-	-
Gas connection hose	-	-	-	-	-	-	-	-	-

Code	07510400	07510000	07510303	07510300	07511002	07511402	07510309	07510007	07511401	07511305	07510003	07510308	07510301	07510306
EAN	8422248055277	8422248055260	8422248055253	8422248048453	8422248100144	8422248100151	8422248099684	8422248099677	8422248100137	8422248099998	8422248077187	8422248077170	8422248049450	8422248058476
Model	MC 25 GTC BK	MC 25 GTC WH	MC 32 DC	MC 25 D ENC	MW BI2505 DCG WH	MW BI2505 DCG BK	MW BI2001 DCG SS	MW BI2005 DCG WH	MW BI2005 DCG BK	MW BI2000 MG SS	MMA 20 WH	MMA 20 X	MC 20 D ENC	MC 20 IX
Type (Built in / free standing)	Built in	Built in	Built in	Built in	Built in	Built in	Built in	Built in	Built in	Built in	Built in	Built in	Built in	Built in
DIMENSIONS														
Appliance width [mm]	595	595	595	595	592	592	592	595	595	592	595	595	595	595
Appliance height [mm]	388	388	388	388	390	390	376	390	390	376	388	388	388	388
Appliance depth [mm]	400	400	470	400	400	400	320	320	320	330	347	347	347	347
Cavity width [mm]	328	328	351	328	330	330	315	315	315	315	295	295	295	295
Cavity height [mm]	208	208	249	208	212	212	211	211	211	211	218	218	218	218
Cavity depth [mm]	369	369	358	369	330	330	296	296	296	296	314	314	314	314
Characteristics														
Finishing	Black glass	White glass	Stainless steel	Stainless steel	White glass	Black glass	Stainless steel	White glass	Black glass	Stainless steel	White glass	Stainless steel	Stainless steel	Stainless steel
Door opening System	Push button	Push button	Push button	Push button	Push button	Push button	Push button	Push button	Push button	Push button	Push button	Push button	Push button	Push button
Cavity capacity [L]	25	25	32	25	25	25	20	20	20	20	20	20	20	20
Cavity type	Stainless steel	Stainless steel	Stainless steel	Stainless steel	Stainless steel	Stainless steel	Stainless steel	Stainless steel	Stainless steel	Stainless steel	Stainless steel	Stainless steel	Stainless steel	Stainless steel
Inside light	Yes	Yes	Yes	Yes	Yes	Yes	Yes	Yes	Yes	Yes	Yes	Yes	Yes	Yes
Opening door angle [degrees]	90	90	90	90	88	88	90	90	90	90	90	90	90	90
Noise level db[A]	63	63	63	63	68	68	68	68	68	68	63	63	63	63
Controls														
Control type	Electronic	Electronic	Electronic	Electronic	Electronic	Electronic	Electronic	Electronic	Electronic	Mechanic	Mechanic	Mechanic	Electronic	Mechanic
Display technology	Red LCD	Red LCD	Red LCD	White LCD	White LCD	White LCD	Red LCD	Red LCD	Red LCD	-	-	-	Red LCD	-
Electronic timer	Yes	Yes	Yes	Yes	Yes	Yes	Yes	Yes	Yes	No	No	No	Yes	No
Manual timer	No	No	No	No	No	No	No	No	No	Yes	Yes	Yes	No	Yes
Start/Stop button	Yes	Yes	Yes	Yes	Yes	Yes	Yes	Yes	Yes	No	No	No	Yes	No
Timer [min]	95	95	95	95	60	60	60	60	60	30	35	35	95	35
Power selector	Yes	Yes	Yes	Yes	Yes	Yes	Yes	Yes	Yes	Yes	Yes	Yes	Yes	Yes
Function and temperature selector	Function selector	Function selector	Function selector	Function selector	Function selector	Function selector	Function selector	Function selector	Function selector	No	No	No	Function selector	No
Working indicator	LED display	LED display	LED display	LED display	LED display	LED display	LED display	LED display	LED display	No	No	No	LED display	No
Weight selector	Yes	Yes	Yes	Yes	Yes	Yes	Yes	Yes	Yes	No	No	No	Yes	No
Programs														
Number of programmes	8	8	10	8	8	8	6	6	6	9	9	9	8	9
Grill	Yes	Yes	Yes	Yes	Yes	Yes	Yes	Yes	Yes	Yes	Yes	Yes	Yes	Yes
Simultaneous grill + microwave	Yes	Yes	Yes	Yes	Yes	Yes	Yes	Yes	Yes	Yes	Yes	Yes	Yes	Yes
Convection fan	No	No	Yes	No	No	No	No	No	No	No	No	No	No	No
Defrosting, heating and cooking by food type	Yes	Yes	Yes	Yes	Yes	Yes	Yes	Yes	Yes	No	Yes	Yes	Yes	Yes
Memories	No	No	No	No	No	No	No	No	No	No	No	No	No	No
Quick start	Yes	Yes	Yes	Yes	Yes	Yes	Yes	Yes	Yes	No	No	No	Yes	No
Safety														
Safety thermostat	Yes	Yes	Yes	Yes	Yes	Yes	Yes	Yes	Yes	Yes	Yes	Yes	Yes	Yes
Safety automatic disconnection	No	No	No	No	No	No	No	No	No	No	No	No	No	No
Child safety lock	Yes	Yes	Yes	Yes	Yes	Yes	Yes	Yes	Yes	No	No	No	Yes	No
Door temperature	65	65	65	65	65	65	65	65	65	65	65	65	65	65
Nº of glasses in the door	1	1	1	1	1	1	1	1	1	1	1	1	1	1
Electrical connection														
Grill power [W]	1000	1000	1100	1000	1200	1200	800	800	800	800	1000	1000	1000	1000
Microwave power [W]	900	900	900	900	900	900	700	700	700	700	800	800	800	800
Convection power [W]	-	-	2500	-	-	-	-	-	-	-	-	-	-	-
Rated power [W]	1450	1450	1550	1450	1280	1280	1080	1080	1080	1080	1250	1250	1250	1250
Voltage / Frecuency [V/Hz]	230 / 50	230 / 50	230-240 / 50	230 / 50	220 - 240 V / 50Hz	220 - 240 V / 50Hz	220 - 240 V / 50Hz	220 - 240 V / 50Hz	220 - 240 V / 50Hz	220 - 240 V / 50Hz	230 / 50	230 / 50	230 / 50	230 / 50
Power cord length	1000	1000	1000	1000	1100	1100	1100	1100	1100	1100	1000	1000	1000	1000
Plug type	Schuko	Schuko	Schuko	Schuko	Schuko	Schuko	Schuko	Schuko	Schuko	Schuko	Schuko	Schuko	Schuko	Schuko
Accessories														
Rotatory removable glass	Yes	Yes	Yes	Yes	Yes	Yes	Yes	Yes	Yes	Yes	Yes	Yes	Yes	Yes
Diameter of glass dish [mm]	315	315	315	315	315	315	245	245	245	245	245	245	245	245
Built in frame	Included	Included	Included	Included	Included	Included	Included	Included	Included	Included	Included	Included	Included	Included
Ventilation kit	No	No	No	No	No	No	No	No	No	No	No	No	No	No

Code	08024202	08081206	08063102	08026001	08026002	08026003	08026609	08000400
EAN	8422248079631	8422248079648	8422248077675	8422248054485	8422248059190	8422248059206	8422248069014	8422248078283
Model	IDF 9012 PRO BK	IDF 8021 PRO BK	IDB 6003 PRO BK	GIGA 750 BK	GIGA 600 BK	GIGA 600 WH	GIGA 600 SD	AS 750
Type	Induction	Induction	Induction	Induction	Induction	Induction	Induction	Surface
Product fiche								
Cooking zones	5	4	3	6	4	4	4	4
Right front zone: Diameter (mm)	210x200	180	-	237x189	237x189	237x189	237x189	215x190
Right front zone: Power (kW)	2	1,2	-	2,1	2,1	2,1	2,1	1,6
Right front zone: Booster (kW)	2,8	1,5	-	3,7	3,7	3,7	3,7	1,85
Right front zone: Consumption (Wh/kg)	182,7	179,5	-	182,7	182,7	182,7	182,7	182,9
Right rear zone: Diameter (mm)	210x200	-	300	237x189	237x189	237x189	237x189	215x190
Right rear zone: Power (kW)	1,5	-	2,3	2,1	2,1	2,1	2,1	2,1
Right rear zone: Booster (kW)	2	-	3	3,7	3,7	3,7	3,7	3
Right rear zone: Consumption (Wh/kg)	182,9	-	180,8	182,7	182,7	182,7	182,7	182,7
Central front zone: Diameter (mm)	-	-	-	237x189	-	-	-	
Central front zone: Power (kW)	-	-	-	2,1	-	-	-	
Central front zone: Booster (kW)	-	-	-	3,7	-	-	-	
Central front zone: Consumption (Wh/kg)	-	-	-	182,7	-	-	-	
Central rear zone: Diameter (mm)	300	300	-	237x189	-	-	-	
Central rear zone: Power (kW)	2,3	2,3	-	2,1	-	-	-	
Central rear zone: Booster (kW)	3	3	-	3,7	-	-	-	
Central rear zone: Consumption (Wh/kg)	216,3	216,3	-	182,7	-	-	-	
Front left zone: Diameter (mm)	210x200	210x200	230	237x189	237x189	237x189	237x189	215x190
Front left zone: Power (kW)	1,5	1,5	2,3	2,1	2,1	2,1	2,1	1,6
Front left zone: Booster (kW)	2	2	2,6	3,7	3,7	3,7	3,7	1,85
Front left zone: Consumption (Wh/kg)	182,9	182,9	184,1	182,7	182,7	182,7	182,7	182,9
Left rear zone: Diameter (mm)	210x200	210x200	180	237x189	237x189	237x189	237x189	215x190
Left rear zone: Power (kW)	2	2	1,2	2,1	2,1	2,1	2,1	2,1
Left rear zone: Booster (kW)	2,8	2,8	1,5	3,7	3,7	3,7	3,7	3
Left rear zone: Consumption (Wh/kg)	182,7	182,7	181,7	182,7	182,7	182,7	182,7	182,7
Energy consumption of the hob (Wh/kg)	189,5	190,4	182,2	182,7	182,7	182,7	182,7	190,4
Dimensions								
Product width (mm)	900	800	590	770	590	590	590	770
Product depth (mm)	520	520	520	520	520	520	520	520
Product height (mm)	60	60	60	50	50	50	50	250
Built-in height (mm)	875	745	565	755	565	565	565	750
Built-in depth (mm)	495	495	495	495	495	495	495	490
Ventilation slot (mm)	5	5	5	5	5	5	5	5
Fixing system	Quick-Fix System	Quick-Fix System	Quick-Fix System	Quick-Fix System	Quick-Fix System	Quick-Fix System	Quick-Fix System	Quick-fix System
Finishing								
Colour	Black	Black	Black	Black	Black	White	Sand	Black
Aesthetic	Front bevel	Front bevel	Front bevel	Front bevel	Front bevel	Front bevel	Front bevel	Front bevel
Control								
Control type	5" TFT Touch Screen	5" TFT Touch Screen	5" TFT Touch Screen	Independent Slider for each area	Independent Slider for each area	Independent Slider for each area	Independent Slider for each area	Touch
Power selection (+/-)	Centralized	Centralized	Centralized	Individual per zone	Individual per zone	Individual per zone	Individual per zone	Centralized
Power levels	9 + Booster	9 + Booster	9 + Booster	9 + Booster	9 + Booster	9 + Booster	9 + Booster	9 + Booster
Timer	Yes	Yes	Yes	Yes	Yes	Yes	Yes	Yes
Countdown alarm	Yes	Yes	Yes	Yes	Yes	Yes	Yes	Yes
Power management	Yes	Yes	Yes	No	No	No	No	No
Security								
Safety lock	Yes	Yes	Yes	Yes	Yes	Yes	Yes	Yes
Residual heat indicator	Yes	Yes	Yes	Yes	Yes	Yes	Yes	Yes
Automatic pan detection	Yes	Yes	Yes	Yes	Yes	Yes	Yes	Yes
Automatic safety switch-off	Yes	Yes	Yes	Yes	Yes	Yes	Yes	Yes
Protection against liquid spillage	Yes	Yes	Yes	Yes	Yes	Yes	Yes	Yes
Electrical connection								
Nominal voltage (V)	220-240	220-240	220-240	220-240	220-240	220-240	220-240	220-240
Mains frequency (Hz)	50-60	50-60	50-60	50-60	50-60	50-60	50-60	50-60
Max Product power (kW)	9	7,2	7,1	11	7,4	7,4	7,4	7,53

08000403	08024401	08081400	08063400	08053000	08063500	08063103	08053001	08073411	08073211	08081202
8422248102568	8422248079631	8422248082020	8422248093972	8422248108607	8422248108577	8422248079518	8422248108614	8422248084215	8422248055871	8422248054478
IAS 770	INSB 9012 BK	INSB 8021 BK	INSB 6032 BK	INSB 6030 WH	INSB 6028 BK	INSB 6003 BK	INSB 6003 WH	ISB 6130 BK	ISB 603 BK	IB 753 BK
Surface	Induction	Induction	Induction	Induction	Induction	Induction	Induction	Induction	Induction	Induction
4	5	4	3	3	3	3	3	3	3	3
190x190	210x200	180	-	-	-	-	-	-	-	-
2	2	1,2	-	-	-	-	-	-	-	-
2,8	2,8	1,5	-	-	-	-	-	-	-	-
206,8	182,7	179,5	-	-	-	-	-	-	-	-
190x190	210x200	-	320/190	300/180	280/180	300	300	270	270	270
1,5	1,5	-	3/1,5	3	3	2,3	2,3	2,3	2,3	2,3
2	2	-	3,6/1,8	3,6	3,6	3	3	3	3	3
181,5	182,9	-	175,4	175,4	175,4	180,8	180,8	187,2	187,2	187,2
-	-	-	-	-	-	-	-	-	-	-
-	-	-	-	-	-	-	-	-	-	-
-	-	-	-	-	-	-	-	-	-	-
-	-	-	-	-	-	-	-	-	-	-
-	300	300	-	-	-	-	-	-	-	180
-	2,3	2,3	-	-	-	-	-	-	-	1,4
-	3	3	-	-	-	-	-	-	-	-
-	216,3	216,3	-	-	-	-	-	-	-	184,9
190x190	210x200	210x200	210	210	210	230	230	220	220	220
2	1,5	1,5	2,3	2,3	2,3	2,3	2,3	2,3	2,3	2,3
2,8	2	2	2,6	2,6	2,6	2,6	2,6	3	3	3
194,2	182,9	182,9	191,5	191,5	191,5	184,1	184,1	176,3	176,3	176,3
190x190	210x200	210x200	160	160	160	180	180	180	180	-
1,5	2	2	1,2	1,2	1,2	1,2	1,2	1,4	1,4	-
2	2,8	2,8	1,5	1,5	1,5	1,5	1,5	-	-	-
181,5	182,7	182,7	194,8	194,8	194,8	181,7	181,7	184,9	184,9	-
194,2	189,5	190,4	187,2	187,2	187,2	182,2	182,2	182,8	182,8	182,8
770	900	800	630	590	590	590	590	590	590	770
520	520	520	520	520	520	520	520	520	520	390
250	60	60	60	60	60	60	60	68	68	68
750	875	745	565	565	565	565	565	560	560	750
490	495	495	495	495	495	495	495	490	490	370
5	5	5	5	5	5	5	5	5	5	5
Quick-fix System	Quick-Fix System	Quick-Fix System	Quick-Fix System	Quick-Fix System	Quick-Fix System	Quick-Fix System	Quick-Fix System	Quick-Fix System	Quick-Fix System	Quick-Fix System
Black	Black	Black	Black	White	Black	Black	White	Black	Black	Black
Front bevel	Front bevel	Front bevel	Front bevel	Front bevel	Front bevel	Front bevel	Front bevel	Front bevel	Front bevel	Rounded
Touch	Independent Slider for each area	Independent Slider for each area	Independent Slider for each area	Independent Slider for each area	Independent Slider for each area	Independent Slider for each area	Independent Slider for each area	Hidden Slider	Slider	Touch
Centralized	Individual per zone	Individual per zone	Individual per zone	Individual per zone	Individual per zone	Individual per zone	Individual per zone	Centralized	Centralized	Centralized
9 + Booster	9 + Booster	9 + Booster	9 + Booster	9 + Booster	9 + Booster	9 + Booster	9 + Booster	9 + Booster	9 + Booster	9 + Booster
Yes	Yes	Yes	Yes	Yes	Yes	Yes	Yes	Yes	Yes	Yes
Yes	Yes	Yes	Yes	Yes	Yes	Yes	Yes	Yes	Yes	Yes
No	No	No	Yes	Yes	Yes	Yes	Yes	No	No	No
Yes	Yes	Yes	Yes	Yes	Yes	Yes	Yes	Yes	Yes	Yes
Yes	Yes	Yes	Yes	Yes	Yes	Yes	Yes	Yes	Yes	Yes
Yes	Yes	Yes	Yes	Yes	Yes	Yes	Yes	Yes	Yes	Yes
Yes	Yes	Yes	Yes	Yes	Yes	Yes	Yes	Yes	Yes	Yes
Yes	Yes	Yes	Yes	Yes	Yes	Yes	Yes	Yes	Yes	Yes
220-240	220-240	220-240	220-240	220-240	220-240	220-240	220-240	220-240	220-240	220-240
50-60	50-60	50-60	50-60	50-60	50-60	50-60	50-60	50-60	50-60	50-60
7,33	9	7,2	7,1	7,1	7,1	7,1	7,1	6,7	6,7	6,7

Code	08081100	08027205	08027100	08027132	08027203	8003401	8003402	08062205
EAN	8422248075473	8422248060189	8422248075480	8422248088176	8422248055864	8422248102469	8422248104975	8422248060196
Model	IB 073 BK	IB 772	IB 0722 BK	IB 1822 BK	IB 2 PLUS BK	ISB 3102 BK	I 3002 HVI BK	IT 773
Type	Induction	Induction	Induction	Induction	Induction	Induction	Induction	Induction+Radiant
Product fiche								
Cooking zones	3	2	2	2	2	2	2	3
Right front zone: Diameter (mm)	-	-	-	-	-	180	160	220
Right front zone: Power (kW)	-	-	-	-	-	1,2	1,2	2,3
Right front zone: Booster (kW)	-	-	-	-	-	1,5	1,5	3
Right front zone: Consumption (Wh/kg)	-	-	-	-	-	183,2	181,5	176,3
Right rear zone: Diameter (mm)	270	200	200	220	180	200	180	-
Right rear zone: Power (kW)	2,3	2,3	2,3	1,5	1,4	2	2	-
Right rear zone: Booster (kW)	3	3	3	2	-	2,3	2,3	-
Right rear zone: Consumption (Wh/kg)	187,2	176,3	176,3	175,9	184,9	180,2	180,9	-
Central front zone: Diameter (mm)	-	-	-	-	-	-	-	-
Central front zone: Power (kW)	-	-	-	-	-	-	-	-
Central front zone: Booster (kW)	-	-	-	-	-	-	-	-
Central front zone: Consumption (Wh/kg)	-	-	-	-	-	-	-	-
Central rear zone: Diameter (mm)	180	-	-	-	-	-	-	180
Central rear zone: Power (kW)	1,4	-	-	-	-	-	-	1,4
Central rear zone: Booster (kW)	-	-	-	-	-	-	-	-
Central rear zone: Consumption (Wh/kg)	184,9	-	-	-	-	-	-	184,9
Front left zone: Diameter (mm)	220	-	-	-	-	-	-	-
Front left zone: Power (kW)	2,3	-	-	-	-	-	-	-
Front left zone: Booster (kW)	3	-	-	-	-	-	-	-
Front left zone: Consumption (Wh/kg)	176,3	-	-	-	-	-	-	-
Left rear zone: Diameter (mm)	-	270	270	220	220	-	-	270/210/145
Left rear zone: Power (kW)	-	2,3	2,3	1,5	2,3	-	-	2,7/1,95/1,05
Left rear zone: Booster (kW)	-	3	3	2	3	-	-	-
Left rear zone: Consumption (Wh/kg)	-	187,2	187,2	175,9	176,3	-	-	140,1
Energy consumption of the hob (Wh/kg)	182,8	182,7	182,7	175,9	180,6	182,2	181,2	167,1
Dimensions								
Product width (mm)	730	750	730	730	590	290	290	750
Product depth (mm)	430	450	430	430	350	520	520	450
Product height (mm)	68	68	68	62	68	65	65	68
Built-in height (mm)	710	710	710	673	560	265	265	710
Built-in depth (mm)	410	410	410	338	330	495	495	410
Ventilation slot (mm)	5	5	5	5	5	5	5	5
Fixing system	Quick-Fix System	Quick-Fix System	Quick-Fix System	Quick-Fix System	Quick-Fix System	Quick-Fix System	Quick-Fix System	Quick-Fix System
Finishing								
Colour	Black	Black	Black	Black	Black	Black	Black	Black
Aesthetic	Front bevel	Front bevel	Front bevel	Front bevel	Front bevel	Rounded	Rounded	Front bevel
Control								
Control type	Slider	Slider	Slider	Touch	Touch	Slider	Knobs	Slider
Power selection (+/-)	Centralized	Centralized	Centralized	Individual per zone	Centralized	Centralized	Knobs	Centralized
Power levels	9 + Booster	9 + Booster	9 + Booster	9 + Booster	9 + Booster	9 + Booster	9	9 + Booster
Timer	Yes	Yes	Yes	Yes	Yes	Yes	Yes	Yes
Countdown alarm	Yes	Yes	Yes	No	Yes	Yes	Yes	Yes
Power management	No	No	No	No	No	No	No	No
Security								
Safety lock	Yes	Yes	Yes	Yes	Yes	Yes	No	Yes
Residual heat indicator	Yes	Yes	Yes	Yes	Yes	Yes	Yes	Yes
Automatic pan detection	Yes	Yes	Yes	Yes	Yes	Yes	Yes	Yes
Automatic safety switch-off	Yes	Yes	Yes	Yes	Yes	Yes	Yes	Yes
Protection against liquid spillage	Yes	Yes	Yes	Yes	Yes	Yes	Yes	Yes
Electrical connection								
Nominal voltage (V)	220-240	220-240	220-240	220-240	220-240	220-240	220-240	220-240
Mains frequency (Hz)	50-60	50-60	50-60	50-60	50-60	50-60	50-60	50-60
Max Product power (kW)	6,7	6	6	3,6	3,7	3,5	3,5	6,4

08079202	**08040010**	**08072203**	**08063107**	**08063403**	**08077000**	**08060403**	**08049006**
8422248073592	**8422248058285**	**8422248108522**	**8422248082525**	**8422248094207**	**8422248074162**	**8422248108539**	**8422248108515**
IT 7002 BK	**TN 604**	**604 HVI /B**	**TT 603**	**TD 6003**	**TT 5003**	**TD 3002 BK /A**	**VI 302 /C**
Induction+Radiant	**Radiant**	**Radiant**	**Radiant**	**Radiant**	**Radiant**	**Radiant**	**Radiant**
2	4	4	3	3	3	2	2
-	180	160	180	180	180		-
-	1,8	1,2	1,8	1,8	1,8		-
-	-	-	-	-	-		-
-	191,3	183,82	147,1	195,4	147,1		-
220	140	195	140	140	140		-
2,3	1,2	1,8	1,2	1,2	1,2		-
3	-	-	-	-	-		-
176,3	194,1	183,33	147	185,4	147		-
-	-	-	-	-	-	155	160
-	-	-	-	-	-	1,2	1,2
-	-	-	-	-	-	-	-
-	-	-	-	-	-	187	183,82
-	-	-	-	-	-	190/120	195
-	-	-	-	-	-	2,0/1,0	1,8
-	-	-	-	-	-	-	-
-	-	-	-	-	-	155,4	183,33
-	140	195	-	-	-		-
-	1,2	1,8	-	-	-		-
-		-	-	-	-		-
-	187,7	183,33	-	-	-		-
270/210	180	160	270/210/145	270/210	270/210/145		-
2,4/1,5	1,8	1,2	2,7/1,95/1,05	2,4/1,5	2,7/1,95/1,05		-
-	-	-	-	-	-		-
193,5	183,4	183,82	140,1	193,5	140,1		-
184,9	189,1	183,57	144,7	191,4	144,7	150	183,57
770	590	590	590	590	600	290	290
450	520	520	520	520	435	520	520
68	67	44	67	67	67	65	44
710	560	560	560	560	580	265	270
410	490	490	490	490	415	495	490
5	-	-	-	-	-	-	-
Quick-Fix System	Quick-Fix System	Quick-Fix System	Quick-Fix System	Quick-Fix System	Quick-Fix System	Quick-Fix System	Quick-Fix System
Black	Black	Black	Black	Black	Black	Black	Black
Front bevel	Rounded	Rounded	Rounded	Rounded	Rounded	Rounded	Rounded
Slider	Touch	Mechanical	Touch	Touch	Touch	Touch	Mechanical
Centralized	Centralized	Knobs	Centralized	Centralized	Centralized	Centralized	Knobs
9 + Booster	9	9	9	9	9	9	9
Yes	No	No	No	No	No	No	No
Yes	No	No	No	No	No	No	No
No	No	No	No	No	No	No	No
Yes	Yes	No	Yes	Yes	Yes	Yes	No
Yes	Yes	Yes	Yes	Yes	Yes	Yes	Yes
Yes	No	No	No	No	No	No	No
Yes	Yes	No	Yes	Yes	Yes	Yes	No
Yes	Yes	No	Yes	Yes	Yes	Yes	No
220-240	220-240	220-240	220-240	220-240	220-240	220-240	220-240
50-60	50-60	50-60	50-60	50-60	50-60	50-60	50-60
5,4	6	6	5,7	5,4	5,7	3,2	3

Code	08005404	08046410	08041500	08041100	08041503	08041501
EAN	8422248081924	8422248081962	8422248072724	8422248072557	8422248078788	8422248073691
Model	LCI 9041 BK	L-7005 CI	LCI 6031 BK	LCI 6031 WH	LCIB 6031 BK	CCI 6031 BK
Type (Glass /St.Steel /Enamelled)	Glass	Glass	Glass	Glass	Glass	Glass
Product fiche						
Suitable for City Gas	√	√	√	√	-	√
Suitable for LPG	-	-	-	-	√	-
Number of burners	5	5	4	4	4	4
Triple ring power [kW]	3,5	3,5	3,5	3,5	3,5	3,5
Fast power [kW]	3	3	3	3	3	
Semi-fast power [kW]	1,75	1,75	1,75	1,75	1,75	1,75
Semi-fast power [kW]	1,75	1,75				1,75
Auxilliar power [kW]	1	1	1	1	1	1
Triple ring consumption [l/h]	333	333	333	333	94	333
Fast consumption [l/h]	286	286	286	286	88	
Semi-fast 1 consumption [l/h]	167	167	167	167	69	167
Semi-fast 2 consumption [l/h]	167	167				167
Auxilliar consumption [l/h]	95	95	95	95	73	95
Dimensions						
Appliance width [mm]	874	700	640	640	640	590
Appliance depth [mm]	520	510	510	510	500	510
Appliance height [mm]	55	55	55	55	55	52
Built-in width [mm]	828	555	555	555	555	555
Built-in depth [mm]	478	470	475	475	475	475
Anchor system	Fixation brackets	Fixation brackets	Fixation brackets	Fixation brackets	Fixation brackets	Fixation brackets
Characteristics						
Plug-in autoignition	√	√	√	√	√	√
Enamelled Grills/Burners	-	-	-	-	-	-
Cast Iron Grills/Burners	√	√	√	√	√	√
Security						
Safety valve	√	√	√	√	√	√
Electrical Connection						
Nominal voltage (V)	220-240	220-240	220-240	220-240	220-240	220-240
Mains frequency (Hz)	50-60	50-60	50-60	50-60	50-60	50-60
Product power (kW)	11	11	9,25	9,25	9,25	8
Accesories						
LPG butane/natural kit conversor (included)	√	√	√	√	√	√

Code	08041505	08047410	08028403	08005350	08045302	08066002
EAN	8422248094269	8422248093743	8422248058674	8422248081948	8422248074612	8422248058735
Model	CCI 5003 BK	SCI 3002 BK	RCI 631 BK	LGI 9041 X	LGI 7041 X	LGD 631 X
Type (Glass /St.Steel /Enamelled)	Glass	Glass	Glass	St.Steel	St.Steel	St.Steel
Product fiche						
Suitable for City Gas	√	√	√	√	√	-
Suitable for LPG	-	-	-	-	-	√
Number of burners	3	2	4	5	5	4
Triple ring power [kW]	3,5		3,5	3,5	3,5	3,5
Fast power [kW]		3		3	3	3
Semi-fast power [kW]	1,75		1,75	1,75	1,75	1,75
Semi-fast power [kW]			1,75	1,75	1,75	
Auxilliar power [kW]	1	1	1	1	1	1
Triple ring consumption [l/h]	333			333	333	333
Fast consumption [l/h]		286		286	286	286
Semi-fast 1 consumption [l/h]	167			167	167	167
Semi-fast 2 consumption [l/h]				167	167	
Auxilliar consumption [l/h]	95	95		95	95	95
Dimensions						
Appliance width [mm]	590	300	584	850	680	580
Appliance depth [mm]	450	520	510	500	500	510
Appliance height [mm]	55	55	55	55	45	45
Built-in width [mm]	555	280	452	828	555	552
Built-in depth [mm]	400	480	470	478	475	470
Anchor system	Fixation brackets	Fixation brackets	Fixation brackets	Fixation brackets	Fixation brackets	Fixation brackets
Characteristics						
Plug-in autoignition	√	√	√	√	√	√
Enamelled Grills/Burners	-	-	-	-	-	-
Cast Iron Grills/Burners	√	√	√	√	√	√
Security						
Safety valve	√	√	√	√	√	√
Electrical Connection						
Nominal voltage (V)	220-240	220-240	220-240	220-240	220-240	220-240
Mains frequency (Hz)	50-60	50-60	50-60	50-60	50-60	50-60
Product power (kW)	6,25	4	8	11	11	9,25
Accesories						
LPG butane/natural kit conversor (included)	√	√	√	√	√	√

08041412	08068400	08068401	08068403	08068405	08068501	08068309	08068402
8422248058681	8422248068352	8422248068376	8422248078795	8422248086929	8422248073707	8422248067355	8422248073677
CI 631 BK A/A	CIB 6031 BK	LCI 6021 BK	LCIB 6021 BK	SCI 6021 BK	CCI 6021 BK	CI 6021 BK	CIB 6021 BK
Glass	Glass	Glass	Glass	Glass	Glass	Glass	Glass
√	-	√	-	√	√	√	-
-	√	-	√	-	-	-	√
4	4	3	3	3	3	3	3
3,5	3,5	3,5	3,5	3,5	3,5	3,5	3,5
1,75	1,75	1,75	1,75	1,75	1,75	1,75	1,75
1,75	1,75						
1	1	1	1	1	1	1	1
333	94	333	94	333	333	333	94
167	69	167	69	167	167	167	69
167	69						
95	73	95	73	95	95	95	73
590	590	590	580	580	590	590	590
510	510	510	500	500	510	510	510
52	52	55	55	55	52	52	52
555	555	555	555	555	555	555	555
475	475	475	475	475	475	475	475
Fixation brackets	Fixation brackets	Fixation brackets	Fixation brackets	Fixation brackets	Fixation brackets	Fixation brackets	Fixation brackets
√	√	√	√	√	√	√	√
√	√	-	-	-	-	√	√
-	-	√	√	√	√	-	-
√	√	√	√	√	√	√	√
220-240	220-240	220-240	220-240	220-240	220-240	220-240	220-240
50-60	50-60	50-60	50-60	50-60	50-60	50-60	50-60
8	8	6,25	6,25	6,25	6,25	6,25	6,25
√	√	√	√	√	√	√	√

08066011	08066600	08066312	08068308	08068310	08039600
8422248067331	8422248067775	8422248068369	8422248067348	8422248073684	8422248108829
GI 6031 X	GI 6004 X	GIB 6004 X	GI 6021 X	GIB 6021 X	GI 3002 X /A
St.Steel	St.Steel	St.Steel	St.Steel	St.Steel	St.Steel
√	√	-	√	-	√
-	-	√	-	√	-
4	4	4	3	3	2
3,5			3,5	3,5	
	3	3			3
1,75	1,75	1,75	1,75	1,75	
1,75	1,75	1,75			
1	1	1	1	1	1
333			333	94	
	286	286			286
167	167	167	167	69	
167	167	167			
95	95	95	95	73	95
580	580	580	580	580	300
500	500	500	500	500	520
45	45	45	45	45	45
555	555	555	555	555	280
475	475	475	475	475	480
Fixation brackets	Fixation brackets	Fixation brackets	Fixation brackets	Fixation brackets	Fixation brackets
√	√	√	√	√	√
√	√	√	√	√	√
-	-	-	-	-	-
√	√	√	√	√	√
220-240	220-240	220-240	220-240	220-240	220-240
50-60	50-60	50-60	50-60	50-60	50-60
8	7,5	7,5	6,25	6,25	4
√	√	√	√	√	√

Code	07200005	07200006	07200007	07200008
EAN	8422248096812	8422248096829	8422248096836	8422248096843
Model	LVI 61014	LVI 46010	LVI 61013	LVI 46009
Finish	Built-in	Built-in	Built-in	Built-in
Product ficche according to EU Regulation 2019/2022 - 2019/2017				
Rated capacity (ps)	14	10	13	10
Height (cm)	81,5	81,5	81,5	81,5
Width (cm)	55	55	57	57
Depth (cm)	60	45	60	45
Energy Efficiency Index (EEI)	55,9	55,9	55,9	55,9
Energy efficiency class (1)	E	E	E	E
Cleaning performance index (IC)	1,13	1,13	1,13	1,13
Drying performance index (ID)	1,07	1,07	1,07	1,07
Energy consumption in kWh [per cycle], based on the ECO programme (2)	0,951	0,755	0,937	0,755
Energy consumption in kWh [per 100 cycle], based on the ECO programme (2)	95	76	94	76
Water consumption in litres [per cycle], based on the ECO programme (3)	11	9	11	9
Duration of the eco programme (Tt) (h:min)	3:40	3:55	3:40	3:55
Type	Built-in	Built-in	Built-in	Built-in
Airborne acoustical noise emissions (dB(A)	49	49	49	49
Airborne acoustical noise emission class	C	C	C	C
Power consumption in off-mode (Po) (W)	0,49	0,49	0,49	0,49
Power consumption in standby mode (Psm) (W)	/	/	/	/
Delay start (W) (if applicable)	1	1	1	1
Networked standby (W) (if applicable)	No	No	No	No
Technical documentation (UE) 2019/2017				
Standard programme energy consumption (SPEC) (kWh/cycle)	0,951	0,755	0,937	0,755
Does standby mode include the display of information?	Yes	Yes	Yes	Yes
Power consumption in standby mode (Psm) in condition of networked standby (if applicable), (W)	/	/	/	/
Power consumption in delay start (Pds) (if applicable) (W)	1	1	1	1
Duration of the Left-on Mode (Tl) (min) (EP)	15	15	15	15
Product dimensons				
Height min/max [mm]	815-865	815-865	815-865	815-865
Width [mm]	598	448	598	448
Depth [mm]	550	550	550	550
Adjustable legs	Yes	Yes	Yes	Yes
Cabinet and door dimensions				
Minimum cabinet height [mm]	820-870	820-870	820-870	820-870
Minimum cabinet width [mm]	600	450	600	450
Minimum cabinet depth [mm]	580	580	580	580
Max door height (built-in models) [mm]	720	720	720	720
Sliding door	No	No	No	No
Control panel				
Display / LED	LED	Display	LED	LED
Salt control pilot light	Yes	Yes	Yes	Yes
Rinse aid control pilot light	Yes	Yes	Yes	Yes
Time remaining indicator	No	Yes	No	No
Delay for starting operation	3/6/9	1-24	3/6/9/12	3/6/9/12
Programs and functions				
Number of programs	5	4	5	5
Intensive[ºC-min]	60-170	-	60-170	60-170
Normal [ºC-min] - Universal	55-180	-	55-180	55-180
ECO [ºC-min]	45-190	45-190	45-190	45-190
Express 90' [ºC-min]	65-90	65-90	65-90	65-90
Glass [ºC-min]	-	-	-	-
Rapid 30' [ºC-min]	45-30	45-30	45-30	45-30
Soak [min]	-	-	-	-
Automatic [ºC-min]	-	Yes	-	-
Start / Pause function	-	Yes	-	-
Half load funtion	Yes	Yes	Yes	Yes
Extra drying function	Yes	Yes	Yes	Yes
Flex wash function (Alternative wash function)	-	-	-	-
Total Clean function (Strong wash function)	-	-	-	-
Equipment				
Upper basket with height regulation	Yes	Yes	Yes	Yes
Upper basket foldable support for cups	Yes	Yes	Yes	Yes
Upper/Lower basket foldable supports	Yes	Yes	Yes	Yes
Type of dispenser	Compact Sliding	Compact Sliding	Compact Sliding	Compact Sliding
Slide&Go tray	-	-	-	-
Third tray	Yes	Yes	-	-
Additional specifications				
Motor	Inverter	Estándar	Estándar	Estándar
Automatic door open	-	-	-	-
Enabled for all in one detergent	Yes	Yes	Yes	Yes
Type of cavity	S. steel	S. steel	S. steel	S. steel
Safety				
Child lock	Yes	Yes	Yes	Yes
Triple security system	Yes	Yes	Yes	Yes
Power and water connection				
Voltage range [V]	220-240	220-240	220-240	220-240
Frecuency [Hz]	50	50	50	50
Rated power [W]	1760-2100	1760-2100	1760-2100	1760-2100
Rated current [A]	8-8.75	8-8.75	8-8.75	8-8.75
Type of plug	Schuko	Schuko	Schuko	Schuko
Power cord length [m]	1,5	1,5	1,5	1,5
Inlet water hose length [m]	1,5	1,5	1,5	1,5
Drain water hose length [m]	1,6	1,6	1,6	1,6

DISHWASHER (1) Classes range from A (most efficient) to G (least efficient) (2) Energy consumption based on the ECO program, using cold water. The actual energy consumption depends on the conditions of use of the appliance (3) Water consumption in liters per year based on the ECO program. The actual water consumption depends on the conditions of use of the appliance. This appliance is suitable for washing normally soiled dishes and is the most efficient in terms of combined energy and water consumption.

Code	07900002
EAN	8422248096942
Model	LI 08014 /A
Finish	Built-in
Product fiche according to EU Regulation 2019/2023	
Rated capacity (kg)	8
Height (cm)	83
Width (cm)	60
Depth (cm)	54
Energy Efficiency Index (EEI)	60
Energy efficiency class (1)	B
Cleaning performance index	1,04
Rinsing effectiveness (g/kg)	5
Energy consumption in kWh [per cycle], based on the ECO programme (2)	0,545
Water consumption in litres [per cycle], based on the ECO programme (3)	48
Maximum temperature inside the treated textile (ºC) - Rated Capacity	37
Maximum temperature inside the treated textile (ºC) - Half Capacity	33
Maximum temperature inside the treated textile (ºC) - Quarter Capacity	23
Remaining moisture content (%) - Rated capacity	53
Remaining moisture content (%) - Half capacity	53
Remaining moisture content (%) - Qurter capacity	53
Spin speed (rpm) - Rated capacity	1400
Spin speed (rpm) - Half capacity	1400
Spin speed (rpm) - Quarter capacity	1400
Spin-drying efficiency class (4)	B
Programme duration (h:min) - Rated capacity	3 : 38
Programme duration (h:min) - Half capacity	2 : 48
Programme duration (h:min) - Quarter capacity	2 : 48
Type	Built-in
Airbone acoustical noise emissions in the spinning phase (dBA)	76
Airbone acoustical noise amision class (spninning phase)	B
Off-mode (W)	0,50
Standby mode (W)	1
Delay start (W)	4
Product dimensons	
Height min/max [mm]	830/850
Width [mm]	590
Depth [mm]	520
Adjustable legs	Yes
Cabinet and door dimensions	
Minimum cabinet height [mm]	840
Minimum cabinet width [mm]	600
Minimum cabinet depth [mm]	580
General features	
Loading type	Front
Motor type	Silence Inverter
Hatch door diameter [cm]	31
Drum type	Stainless Steel
Filter system	Accessible
Foam reduction system	Accessible
Load self adjustment	Yes
Control	
Control type	LED Digital Display
Independent washing temperature selection	Yes
Independent spinning speed selection	Yes
Delay start [h]	Yes
Start / Pause key	Yes
Countdown display	Yes
Washing cycle display	Yes
Programmes	
Nº of programmes	16
Cotton	Yes
Sintetic	Yes
Delicates	Yes
ECO	Yes
Wool	Yes
Hand wash	Yes
Quick [min]	Yes
Mix	Yes
Sport clothes	Yes
Baby clothes	Yes
Customized	Yes
Special functions	
Prewash	Yes
Extra rinse	Yes
Safety	
Child-lock door	Yes
Anti-flooding system	Yes
Power and water connection	
Voltage range [V]	220-240
Frecuency [Hz]	50
Rated power [W]	1.950
Rated current [A]	10
Type of plug	Schuko
Power cord length [m]	1,5
Inlet water hose length [m]	1,5
Drain water hose length [m]	1,6

WASHING MACHINES Normal washing program: ECO 40-60 (1) Classes range from A (most efficient) to G (least efficient). (2) Weighted annual consumption based on the ECO 40-60 program. (3) Weighted annual consumption based on the ECO 40-60 program. Actual water consumption depends on how the appliance is used. (4) On a scale from A (most efficient) to G (least efficient).

Code	07800010	07850003
EAN	8422248106566	8422248102131
Model	CI-54177 ST /C	CI-54177 NF /B
Finish	Built-in	Built-in
Product fiche according to EU Regulation 2019/2016		
Category	7	7
Energy efficiency class	F	F
Energy consumption [kWh/year] (1)	271	241
Refrigerator storage volume [l]	179	177
Freezer storage volume **** [l]	70	64
Star rating	4	4
Frost-free fridge	-	Yes
Frost-free freezer	-	Yes
Power cut safe [h]	10	8
Freezing capacity [kg/24h]	3,2	2,5
Climate class (2)	N,ST	ST
Noise emissions [dBA]	39	41
Installation type	Built-in	Built-in
Dimmensions		
Height [mm]	1765	1769
Width [mm]	540	540
Depth [mm]	540	550
Opening of the door	Right	Right
Reversible doors	Yes	Yes
Wheels	Yes	Yes
External / Recessed handle	Recessed handle	Recessed handle
Control		
Cooling type	Static	No Frost
Control	Mecánico	Electronic
Display	-	Yes
Electronic refrigerator temperature regulation	-	Yes
Electronic freezer temperature regulation	-	Yes
Super cooling / Super freezing function	Yes / Yes	-
Holiday function	-	-
Winter-Summer function	-	-
Refrigerator equipment		
Number of door balconies	3	3
Number of glass shelves	4	4
Wine rack	-	-
Drawer for fruits and vegetables	Yes	Yes
Chiller for meat and fish	-	-
Metallic inner decoration	-	Yes
Number of egg tray - Egg capacity	1-6	1-6
Freezer equipment		
Number of drawers / closed drawers	3	3
Ice trays / Ice cube quantity	1-12	1-12
Ilumination		
Fridge - Freezer lighting	Yes - /	Yes - /
LED lighting	Yes - /	Yes - /
Power and water connection		
Voltage range [V]	220-240	220-240
Frecuency [Hz]	50	50
Rated power [W]	115	100
Rated current [A]	0,75	0,8
Type of plug	Schuko	Schuko
Power cord length [m]	1,6	1,8

FRIDGE (1) The actual energy consumption depends on the conditions of use of the device and its location, according to the results obtained in the standard test of 24 hours defined in EN 62552 regulation. (2) Type of climates: SN: From +10ºC to +34ºC ambient temperature. N: From +16ºC to +32ºC ambient temperature. ST: From +16ºC to +38ºC ambient temperature. T: From +16ºC to +43ºC ambient temperature.

Code	02625006	02621006	02624006	02624016	02607101	02625300	02621009
EAN	8422248108652	8422248108645	8422248108669	8422248108638	8422248074681	8422248048743	8422248043175
Model	CB 50-40 R10	CB 45-40 R10	CB 40-40 P R10	CB 40-40 R10	CB-2	CB 50-40	CB 45-40
DIMENSIONS							
Cutout dimension (lenght x width) [mm]	500x400	450x400	400x400	400x400	745x415	500x400	450x400
Dimensions (lenght x width x depth) [mm]	540x440x200	490x440x200	440x440x250	440x440x200	785x450x200	533x433x200	480x430x180
GENERAL FEATURES							
Type of sink	Undermount	Undermount	Undermount	Undermount	Undermount	Undermount	Undermount
Material	Stainless steel 304	Stainless steel 304	Stainless steel 304	Stainless steel 304	Stainless steel 304	Stainless steel 304	Stainless steel 304
Steel thickness [mm]	1,2	1,2	1,2	1,2	0,9	0,8	0,8
Colour	Steel	Steel	Steel	Steel	Steel	Steel	Steel
BOWL AND DRAINING RACK DETAILS							
Bowl quantity	1	1	1	1	2	1	1
Bowl form	Square with inverted pyramid surface	Square with inverted pyramid surface	Square with inverted pyramid surface	Square with inverted pyramid surface	Square	Square	Square
Draining rack	-	-	-	-	-	-	-
Draining rack form	-	-	-	-	-	-	-
Draining rack position	-	-	-	-	-	-	-
Tap hole	-	-	-	-	-	-	-
ACCESSORIES							
Drainpipe type	Square 3 1/2"	Square 3 1/2"	Square 3 1/2"	Square 3 1/2"	Round 3 1/2"	Round 3 1/2"	Round 3 1/2"
Drainpipe quantity	1	1	1	1	2	1	1
Overflow tube	Yes	Yes	Yes	Yes	Yes	Yes	Yes

Code	02624007	02624302	02624008	02624009	02624010	02606601	02606602
EAN	8422248109000	8422248109017	8422248109024	8422248109031	8422248109048	8422248108911	8422248108928
Model	CB 40-40 /D	CBP 40-40 /A	CBS-1 40-40 D R10	CBS-2 40-40 R10	CBS-1 54-40 R10	CDL-1 EI	CDL-1 ED
DIMENSIONS							
Cutout dimension (lenght x width) [mm]	400x400	400x400	840x490	840x490	570x490	770x480	770x480
Dimensions (lenght x width x depth) [mm]	440x440x180	440x440x200	860x510x200	860x510x200	590x510x200	790x500x180	790x500x180
GENERAL FEATURES							
Type of sink	Undermount	Undermount	Top mount	Top mount	Top mount	Built-in countertop	Built-in countertop
Material	Stainless steel 304	Stainless steel 304	Stainless steel 304	Stainless steel 304	Stainless steel 304	Stainless steel 304	Stainless steel 304
Steel thickness [mm]	0,7	0,7	1,2	1,2	1,2	0,8	0,8
Colour	Steel	Steel	Steel	Steel	Steel	Steel	Steel
BOWL AND DRAINING RACK DETAILS							
Bowl quantity	1	1	1	2	1	1	1
Bowl form	Square	Square	Square	Square	Square	Square	Square
Draining rack	-	-	Yes	-	-	Yes	Yes
Draining rack form	-	-	Square	-	-	Square	Square
Draining rack position	-	-	Right	-	-	Left	right
Tap hole	-	-	Yes	Yes	Yes	Yes	Yes
ACCESSORIES							
Drainpipe type	Round 3 1/2"	Round 3 1/2"	Round 3 1/2"	Round 3 1/2"	Round 3 1/2"	Round 3 1/2"	Round 3 1/2"
Drainpipe quantity	1	1	1	1	1	1	1
Overflow tube	Yes	Yes	Yes	Yes	Yes	Yes	Yes

Code	02606501	02606502	02603302	02603303	02606401	02606402	02607102
EAN	8422248108942	8422248108959	8422248109109	8422248109123	8422248108973	8422248108980	8422248109055
Model	CDP-1 EI	CDP-1 ED	RD-1 EI	RD-1 ED	CDS-1 EI	CDS-1 ED	C-2 AG /B
DIMENSIONS							
Cutout dimension (lenght x width) [mm]	840x480	840x480	880x450	880x450	765x355	765x355	770x480
Dimensions (lenght x width x depth) [mm]	860x500x180	860x500x180	900x470x150	900x470x150	788x448x150	788x448x150	790x500x200
GENERAL FEATURES							
Type of sink	Built-in countertop	Built-in countertop	Built-in countertop	Built-in countertop	Built-in countertop	Built-in countertop	Built-in countertop
Material	Stainless steel 304	Stainless steel 304	Stainless steel 304	Stainless steel 304	Stainless steel 304	Stainless steel 304	Stainless steel 304
Steel thickness [mm]	0,8	0,8	0,8	0,8	0,5	0,5	0,7
Colour	Steel	Steel	Steel	Steel	Steel	Steel	Steel
BOWL AND DRAINING RACK DETAILS							
Bowl quantity	1	1	1	1	1	1	2
Bowl form	Square	Square	Round	Round	Square	Square	Square
Draining rack	Yes	Yes	Yes	Yes	Yes	Yes	-
Draining rack form	Square	Square	Round	Round	Square	Square	-
Draining rack position	Left	right	Reversible	Reversible	Left	right	-
Tap hole	Yes	Yes	Yes	Yes	Yes	Yes	Yes
ACCESSORIES							
Drainpipe type	Round 3 1/2"	Round 3 1/2"	Round 3 1/2"	Round 3 1/2"	Round 3 1/2"	Round 3 1/2"	Round 3 1/2"
Drainpipe quantity	1	1	1	1	1	1	2
Overflow tube	Yes	Yes	Yes	Yes	Yes	Yes	Yes

Code	02604209	02612300	02612400	02612101	02602100
EAN	8422248043151	8422248074377	8422248074384	8422248055338	8422248108997
Model	R-2 AG	CSS60-2	CSS-2	CS-2	RS-1 /A
DIMENSIONS					
Cutout dimension (lenght x width) [mm]	820x420	580x480	465x415	442x462	Ø465
Dimensions (lenght x width x depth) [mm]	850x450x180	609x509x150	490x440x150	465x485x165	485x160
GENERAL FEATURES					
Type of sink	Built-in countertop	Built-in countertop	Built-in countertop	Built-in countertop	Built-in countertop
Material	Stainless steel 304	Stainless steel 304	Stainless steel 304	Stainless steel 304	Stainless steel 304
Steel thickness [mm]	0,7	0,7	0,7	0,7	0,7
Colour	Steel	Steel	Steel	Steel	Steel
BOWL AND DRAINING RACK DETAILS					
Bowl quantity	2	1	1	1	1
Bowl form	Round	Square	Square	Square	Round
Draining rack	-	-	-	-	-
Draining rack form	-	-	-	-	-
Draining rack position	-	-	-	-	-
Tap hole	Yes	-	-	Yes	Yes
ACCESSORIES					
Drainpipe type	Round 3 1/2"	Round 3 1/2"	Round 3 1/2"	Round 3 1/2"	Round 3 1/2"
Drainpipe quantity	2	1	1	1	1
Overflow tube	Yes	Yes	Yes	Yes	Yes

TAPS

Code	02506400	02506300	02507400	02500301	02500401
EAN	8422248107914	8422248107921	8422248107938	8422248107907	8422248107891
Model	CPB	XPB	CPA	XSE	CSE
DIMENSIONS					
Dimensions (diameter, lenght) of spout braided hose [", cm]	3/8, 36	3/8, 36	3/8, 36	3/8, 36	3/8, 36
Product dimensions (height x width x depth) [mm]	510x290x90	510x267x92	682x290x90	294x275x90	294x275x90
Base diameter	52	54	52	51,5	51,5
GENERAL FEATURES					
Water tap type	Single-lever	Single-lever	Single-lever	Single-lever	Single-lever
Material	Brass	Acero inoxidable 304	Brass	Acero inoxidable 304	Brass
Material of handle	Cast	Acero inoxidable 304	Cast	Acero inoxidable 304	Cast
Material of spout braided hose	Stainless steel 304	Stainless steel 304	Stainless steel 304	Stainless steel 304	Stainless steel 304
Finish style	Chrome	Inox	Chrome	Inox	Chrome
Instalation place	Sink, cooktop	Sink, cooktop	Sink, cooktop	Sink, cooktop	Sink, cooktop
SPOUT AND CONTROL DETAILS					
Spout type	Long	Long	Long	Long	Long
Spout form	Semi-professional	Semi-professional	Semi-professional	L form	L form
Removable spout	Yes	Yes	Yes	Yes	Yes
Rotatory spout	Yes / 360°	Yes / 360°	Yes / 360°	Yes / 360°	Yes / 360°
Airy spout	Yes	Yes	Yes	Yes	Yes
Antiscale areator	Yes	Yes	Yes	Yes	Yes
Shower function	Yes	Yes	Yes	Yes	Yes
Flow limitator 6 litre/minute	Yes	Yes	Yes	Yes	Yes
Lead Free	No	Yes	No	Yes	No
Cold start	Yes	Yes	Yes	Yes	Yes
Control type	Handle	Handle	Handle	Handle	Handle
Control position	Right side	Right side	Right side	Right side	Right side
ACCESSORIES					
Cartridge type	Ceramic discs	Ceramic discs	Ceramic discs	Ceramic discs	Ceramic discs
Easy Installation	Yes	Yes	Yes	Yes	Yes
Flexible M10x1x3/8" x 360mm Inox certified instalation hose	Yes	Yes	Yes	Yes	Yes

Code	02500400	02503400	02502400	02501400
EAN	8422248107884	8422248107877	8422248107860	8422248107778
Model	CSA/B	CMA/G	CBA/C	CBB/B
DIMENSIONS				
Dimensions (diameter, lenght) of spout braided hose [", cm]	3/8, 36	3/8, 36	3/8, 36	3/8, 36
Product dimensions (height x width x depth) [mm]	321x255x117	380x230x95	290x220x105	260x156x52
Base diameter	52	50	50	52
GENERAL FEATURES				
Water tap type	Single-lever	Single-lever	Single-lever	Single-lever
Material	Brass	Brass	Brass	Brass
Material of handle	Cast	Cast	Cast	Cast
Material of spout braided hose	Stainless steel 304	Stainless steel 304	Stainless steel 304	Stainless steel 304
Finish style	Chrome	Chrome	Chrome	Chrome
Instalation place	Sink, cooktop	Sink, cooktop	Sink, cooktop	Sink, cooktop
SPOUT AND CONTROL DETAILS				
Spout type	Long	Long	Long	Short
Spout form	L form	Curved	Curved	Line
Removable spout	No	No	No	No
Rotatory spout	Yes / 360°	Yes / 360°	Yes / 360°	Yes / 360°
Airy spout	Yes	Yes	Yes	Yes
Antiscale areator	Yes	Yes	Yes	Yes
Shower function	No	No	No	No
Flow limitator 6 litre/minute	Yes	Yes	Yes	Yes
Lead Free	No	No	No	No
Cold start	Yes	Yes	No	No
Control type	Handle	Handle	Handle	Handle
Control position	Right side	Right side	Right side	Right side
ACCESSORIES				
Cartridge type	Ceramic discs	Ceramic discs	Ceramic discs	Ceramic discs
Easy Installation	Yes	Yes	No	No
Flexible M10x1x3/8" x 360mm Inox certified instalation hose	Yes	Yes	Yes	Yes

VINE COOLERS

Code	**07751006**	**07751007**	**07751008**	**07702004**
EAN	**8422248101790**	**8422248101806**	**8422248101837**	**8422248098915**
Model	**VI 15107 X**	**VI 30117 X**	**VI 54024 X**	**VI 59082 X /A**
Finish	Satinless Steel	Stainless Steel	Stainless Steel	Stainless Steel
Product fiche according to EU Regulation 1060/2010				
Category	Compressor wine cooler	Compressor wine cooler	Compressor wine cooler	Compressor wine cooler
Energy efficiency class	G	G	G	G
Energy consumption [kWh/year]	144	137	135	144
Refrigerator storage volume [l]	20	52	62	129
Climate class	SN/N/ST	SN/N/ST	SN/N/ST	SN/N/ST
Noise emissions [dBA]	41	41	40	41
Installation type	Built-in	Built-in	Built-in	Built-in
Technical specs and control type				
Refrigerator system	Compressor	Compressor	Compressor	Compressor
Display	Touch control display on frontal panel	Touch control display on the door	Touch control display on the door	Touch control display on the door
Wine cooler lighting	Led	Led	Led	Led
Temperature zones	1	2	1	2
Temperature ranges (ºC)	5-20	5-22 / 5-22	5-20	5-22 / 5-22
Storage levels	7	5	3	6
Capacity (bottles)	7	17	28	46
Opening of the door	Right	Right	Right	Right
Reversible doors	Yes	Yes	Yes	Yes
Adjustable feet	Yes	Yes	Yes	Yes
Dimensions				
Height [mm]	870-887	825-870	455	825-870
Width [mm]	150	295	590	595
Depth [mm]	525	570	563	567
Cabinet dimensions				
Minimum cabinet height [mm]	872-889	827-872	450	827-872
Minimum cabinet width [mm]	155	300	560-568	600
Minimum cabinet depth [mm]	560	600	550-560	600
Power connection				
Voltage range [V]	220-240	220-240	220-240	220-240
Frecuency [Hz]	50	50	50	50
Rated power [W]	60	225	65	200
Type of plug	Schuko	Schuko	Schuko	Schuko
Power cord length [mm]	1500	1500	1500	1500

CODE	03114001	03112001	03111001	03112004	03111004
EAN CODE	8422248102520	8422248081474	8422248081467	8422248081580	8422248081573
Model	CTRS-100 REV SLIM	CTRS-80 REV SLIM /A	CTRS-50 REV SLIM /A	CTRH-80-REV	CTRH-50-REV
Type (Electric/Gas)	Electric	Electric	Electric	Electric	Electric
Product fiche according to EU Regulation nº 812/2013					
Declared Load Profile	M	M	M	M	M
Energy Efficiency Class	B	B	B	C	C
Energy Efficiency of Water Heating ηwh	42	39	41,3	36	36
Annual Electricity Consumption AEC (kWh/year)	1228	1316	1243	1427	1426
Temperature adjusted Thermostat Tout of box	75ºC	75ºC	75ºC	75ºC	75ºC
Daily Electricity Consumption Qelec (kWh)	8,458	9,745	8,829	6,692	6,689
Mixed water at 40ºC (l)	144	108	76	91	68
Maximum Thermostat Temperature Tmax	75ºC	75ºC	75ºC	75ºC	75ºC
Out of the Box mode Tout of box	75ºC	75ºC	75ºC	75ºC	75ºC
External Dimmensions					
Width [mm]	570	570	470	385	385
Height [mm]	1090	900	860	1030	711
Depth [mm]	300	300	250	385	385
Net weigth (Kg)	40,7	32,45	25,86	24,55	18,2
Features					
Capacity (l)	93	74	47	73	46
Number of people		2-4	2-3	2-4	2-3
Installation	VERTICAL/HORIZONTAL	VERTICAL/HORIZONTAL	VERTICAL/HORIZONTAL	VERTICAL/HORIZONTAL	VERTICAL/HORIZONTAL
Water connection size	G1/2	G1/2	G1/2	G1/2	G1/2
Temperature Regulation range (ºC)	30-75	30-75	30-75	30-75	30-75
Type of heating elements	Enamel	Enamel	Enamel	Enamel	Enamel
Heating Time to 65º C (+50ºC)	2,61h	2,33h	1,46h	3,11h	1,94h
Static losses to 65ºC (kWh in 24h)	3,2	2,11	1,41	1,66	1,03
Average thickness of isulation (mm)	0.15-0.5	0.15-0.5	0.15-0.5	0.15-0.5	0.15-0.5
Controls					
Control Type	ELECTRONIC	ELECTRONIC	ELECTRONIC	MECHANICAL	MECHANICAL
Thermostat control location	Front	Front	Front	Front	Front
Connection indicator	YES	YES	YES	YES	YES
Temperature indicator light	YES	YES	YES	YES	YES
Heating indicator light	YES	YES	YES	YES	YES
Safety					
Overheating Protection	YES	YES	YES	YES	YES
Protection temperature ºC	101	101	101	95°	95°
Antifreeze protection	YES	YES	YES	NO	NO
Protection against humidity	IPX4	IPX4	IPX4	IPX4	IPX4
Highest Pressure (Mpa)	0,75	0,75	0,75	0,75	0,75
Magnesium Anode dimmensions (mm)	φ22*234	φ22*296	φ22*234	φ22*296	φ22*234
Power connection					
Rated power [W]	1200/2000	1200/2000	1200/2000	1500	1500
Voltage range [V]	220-240	220-240	220-240	220-240	220-240
Frecuency [Hz]	50/60	50/60	50/60	50/60	50/60
Rated current [A]	8,69	8,69	8,69	6,52	6,52
Power cord length [m]	1,5	1,5	1,5	1,5	1,5

CODE	03113001	03112003	03111003	03110001	03110003	03109000
EAN CODE	8422248081559	8422248081542	8422248081535	8422248081528	8422248096621	8422248096638
Model	CTR-100-M	CTR-80-M	CTR-50-M	CTR-30-M	CTRC-30-M	CTRC-15-M
Type (Electric/Gas)	Electric	Electric	Electric	Electric	Electric	Electric
Product fiche according to EU Regulation nº 812/2013						
Declared Load Profile	M	M	M	S	S	XXS
Energy Efficiency Class	C	C	C	C	C	A
Energy Efficiency of Water Heating ηwh	36,2	37,1	36,6	31,6	33	35
Annual Electricity Consumption AEC (kWh/year)	1420	1382	1404	583	558	522
Temperature adjusted Thermostat Tout of box	75ºC	75ºC	75ºC	75ºC	75	75
Daily Electricity Consumption Qelec (kWh)	6,653	6,428	6,56	2,82	2,674	2,462
Mixed water at 40ºC (l)	103	75	73	44	28	16
Maximum Thermostat Temperature Tmax	75ºC	75ºC	75ºC	75ºC	75	75ºC
Out of the Box mode Tout of box	75ºC	75ºC	75ºC	75ºC	75	75ºC
External Dimmensions						
Width [mm]	450	450	385	340	440	368
Height [mm]	970	805	770	650	440	368
Depth [mm]	450	450	385	340	420	340
Net weigth (Kg)	31,1	25,8	19,9	15	13,5	9,6
Features						
Capacity (l)	100	80	50	30	30	15
Number of people	3-5	2-4	2-3	1-2	1-2	1-2
Installation	VERTICAL	VERTICAL	VERTICAL	VERTICAL	VERTICAL	VERTICAL
Water connection size	G1/2	G1/2	G1/2	G1/2	G1/2	G1/2
Temperature Regulation range (ºC)	30-63	30-75	30-75	30-75	30-65	30-75
Type of heating elements	Enamel	Enamel	Enamel	Enamel	Enamel	Enamel
Heating Time to 65º C (+50ºC)	3,89h	3,11h	1,94h	1,17h	0,55	1,11
Static losses to 65ºC (kWh in 24h)	1,43	1,38	0,88	0,81	2,46	2,67
Average thickness of isulation (mm)	0.15-0.5	0.15-0.5	0.15-0.5	0.15-0.5	0.15-0.5	0.15-0.5
Controls						
Control Type	MECHANICAL	MECHANICAL	MECHANICAL	MECHANICAL	MECHANICAL	MECHANICAL
Thermostat control location	Under Bottom Cover	Under Bottom Cover	Under Bottom Cover	Under Bottom Cover	Front	Front
Connection indicator	NO	NO	NO	NO	NO	NO
Temperature indicator light	YES	YES	YES	YES	NO	NO
Heating indicator light	YES	YES	YES	YES	NO	NO
Safety						
Overheating Protection	YES	YES	YES	YES	YES	YES
Protection temperature ºC	69	82	82	82	101	101
Antifreeze protection	NO	NO	NO	NO	NO	NO
Protection against humidity	IPX4	IPX4	IPX4	IPX4	IPX4	IPX4
Highest Pressure (Mpa)	0,75	0,75	0,75	0,75	0,75	0,75
Magnesium Anode dimmensions (mm)	φ22*296	φ22*296	φ22*234	φ22*234	φ18*110	φ18*110
Power connection						
Rated power [W]	1500	1500	1500	1500	1500	1500
Voltage range [V]	220-240	220-240	220-240	220-240	220-240	220-240
Frecuency [Hz]	50/60	50/60	50/60	50/60	50/60	50/60
Rated current [A]	6,52	6,52	6,52	6,52	6,52	6,52
Power cord length [m]	1,5	1,5	1,5	1,5	1,5	1,5

HOODS

		LOADINGS			LANGUAGE MANUAL																									
CODE	MODEL	40HC	40'	20'	ES	DE	FR	EN	IT	NL	PT	DA	FI	SV	EL	RU	PL	HU	ZH	NO	AR	UK	RO	LT	KO	HE	CZ	SK	SR
08000400	AS 750	420	372	182	ES		FR	EN			PT																		
08000403	IAS 770	392	392	196	ES	DE	FR	EN			PT																		
02119207	ISLA MAGRABA	297	263	129	ES	DE	FR	EN	IT	NL	PT	DA	FI	SV	EL	RU	PL	HU	ZH	NO	AR								
02119203	ISLA MOON /B	527	467	229	ES	DE	FR	EN	IT	NL	PT	DA	FI	SV	EL	RU	PL	HU	ZH	NO	AR								
02119101	ISLA FARO X/B	347	308	151	ES	DE	FR	EN	IT	NL	PT	DA	FI	SV	EL	RU	PL	HU	ZH	NO	AR								
02111306	ISLA BENNU SLIM 900 X	236	209	102	ES	DE	FR	EN	IT	NL	PT	DA	FI	SV	EL	RU	PL	HU	ZH	NO	AR								
02111307	ISLA BENNU SLIM 1200 X	315	278	136	ES	DE	FR	EN	IT	NL	PT	DA	FI	SV	EL	RU	PL	HU	ZH	NO	AR								
02111002	ISLA SIRIN 1000 GWH	236	209	102	ES	DE	FR	EN	IT	NL	PT	DA	FI	SV	EL	RU	PL	HU	ZH	NO	AR								
02111001	ISLA SIRIN 1000 WH	236	209	102	ES	DE	FR	EN	IT	NL	PT	DA	FI	SV	EL	RU	PL	HU	ZH	NO	AR								
02111305	ISLA FENIX 1000 X /A	236	209	102	ES	DE	FR	EN	IT	NL	PT	DA	FI	SV	EL	RU	PL	HU	ZH	NO	AR								
02097202	ISLA LEGEND 900 XGBK	165	132	66	ES	DE	FR	EN	IT	NL	PT	DA	FI	SV	EL	RU	PL	HU	ZH	NO	AR								
02197313	ISLA SYGMA 900 X /E	156	138	68	ES	DE	FR	EN	IT	NL	PT	DA	FI	SV	EL	RU	PL	HU	ZH	NO	AR								
02025205	ISLA GAMMA 900 X /D	205	164	72	ES	DE	FR	EN	IT	NL	PT	DA	FI	SV	EL	RU	PL	HU	ZH	NO									
02119311	ISLA VEGA X /C	231	205	100	ES	DE	FR	EN	IT	NL	PT	DA	FI	SV	EL	RU	PL	HU	ZH	NO	AR								
02195309	ANGOLO BOX 1000 X /C	144	127	62	ES	DE	FR	EN	IT	NL	PT	DA	FI	SV	EL	RU	PL	HU	ZH	NO	AR								
02195310	ANGOLO X /D	92	82	40	ES	DE	FR	EN	IT	NL	PT	DA	FI	SV	EL	RU	PL	HU	ZH	NO	AR								
02000103	PRO SILENCE	400	330	164	ES		FR	EN			PT	DA	FI	SV		RU	PL	HU											
02184406	GRECO PRO SILENCE 90 BK	360	319	157	ES		FR	EN			PT	DA	FI	SV		RU	PL	HU											
02184006	GRECO PRO SILENCE 90 WH	360	319	157	ES		FR	EN			PT	DA	FI	SV		RU	PL	HU											
02181306	GLADIUS PRO SILENCE 900 XGBK	308	273	134	ES		FR	EN			PT	DA	FI	SV		RU	PL	HU											
02184401	GOYA PRO 90 BK	308	273	134	ES		FR	EN			PT																		
02184402	GOYA 90 BK	308	273	134	ES	DE	FR	EN	IT	NL	PT	DA	FI	SV	EL	RU	PL	HU	ZH	NO	AR								
02133401	GOYA 70 BK	386	342	168	ES	DE	FR	EN	IT	NL	PT	DA	FI	SV	EL	RU	PL	HU	ZH	NO	AR								
02184001	GOYA 90 WH	308	273	134	ES	DE	FR	EN	IT	NL	PT	DA	FI	SV	EL	RU	PL	HU	ZH	NO	AR								
02133001	GOYA 70 WH	386	342	168	ES	DE	FR	EN	IT	NL	PT	DA	FI	SV	EL	RU	PL	HU	ZH	NO	AR								
02184407	GRECO 90 BK	308	273	134	ES	DE	FR	EN	IT	NL	PT	DA	FI	SV	EL	RU	PL	HU	ZH	NO	AR								
02184007	GRECO 90 WH	308	273	134	ES	DE	FR	EN	IT	NL	PT	DA	FI	SV	EL	RU	PL	HU	ZH	NO	AR								
02145407	GRECO 80 BK	343	304	149	ES	DE	FR	EN	IT	NL	PT	DA	FI	SV	EL	RU	PL	HU	ZH	NO	AR								
02145203	GRECO 80 GR	343	304	149	ES	DE	FR	EN	IT	NL	PT	DA	FI	SV	EL	RU	PL	HU	ZH	NO	AR								
02145007	GRECO 80 WH	343	304	149	ES	DE	FR	EN	IT	NL	PT	DA	FI	SV	EL	RU	PL	HU	ZH	NO	AR								
02133407	GRECO 70 BK	386	342	168	ES	DE	FR	EN	IT	NL	PT	DA	FI	SV	EL	RU	PL	HU	ZH	NO	AR								
02133007	GRECO 70 WH	386	342	168	ES	DE	FR	EN	IT	NL	PT	DA	FI	SV	EL	RU	PL	HU	ZH	NO	AR								
02157403	THALASSA 1200XGBK /D	168	149	73	ES	DE	FR	EN	IT	NL	PT	DA	FI	SV	EL	RU	PL	HU	ZH	NO	AR								
02159405	THALASSA 900XGBK /F	258	229	112	ES	DE	FR	EN			PT																		
02159006	THALASSA 900XGWH /F	258	229	112	ES	DE	FR	EN			PT																		
02159506	THALASSA 900XGGR /F	258	229	112	ES	DE	FR	EN			PT																		
02145406	THALASSA 800XGBK /F	287	255	125	ES	DE	FR	EN			PT																		
02145006	THALASSA 800XGWH /F	287	255	125	ES	DE	FR	EN			PT																		
02145506	THALASSA 800XGGR /F	287	255	125	ES	DE	FR	EN			PT																		
02178207	THALASSA 700XGBK /F	322	286	140	ES	DE	FR	EN			PT																		
02178007	THALASSA 700XGWH /F	322	286	140	ES	DE	FR	EN			PT																		
02127211	THALASSA 600XGBK /F	369	327	160	ES	DE	FR	EN			PT																		
02127011	THALASSA 600XGWH /F	369	327	160	ES	DE	FR	EN			PT																		
02059401	VALTO 900 XGBK	256	256	124	ES	DE	FR	EN	IT	NL	PT																		
02078402	VALTO 700 XGBK	300	300	140	ES	DE	FR	EN	IT	NL	PT																		
02027505	VALTO 600 XGBK	384	384	184	ES	DE	FR	EN	IT	NL	PT																		
02059008	VALTO 900 XGWH	256	256	124	ES	DE	FR	EN	IT	NL	PT																		
02078003	VALTO 700 XGWH	300	300	140	ES	DE	FR	EN	IT	NL	PT																		
02027107	VALTO 600 XGWH	384	384	184	ES	DE	FR	EN	IT	NL	PT																		
02059405	WANDA 900 XGBK	305	282	136	ES	DE	FR	EN	IT		PT		FI			RU		HU			AR								
02059010	WANDA 900 XGWH	305	282	136	ES	DE	FR	EN	IT		PT		FI			RU		HU			AR								
02078405	WANDA 700 XGBK	390	358	174	ES	DE	FR	EN	IT		PT		FI			RU		HU			AR								
02078006	WANDA 700 XGWH	390	358	174	ES	DE	FR	EN	IT		PT		FI			RU		HU			AR								
02027210	WANDA 600 XGBK	450	410	205	ES	DE	FR	EN	IT		PT		FI			RU		HU			AR								
02027012	WANDA 600 XGWH	450	410	205	ES	DE	FR	EN	IT		PT		FI			RU		HU			AR								
02032205	LENA 600XGBK	505	450	210	ES	DE	FR	EN	IT		PT		FI			RU		HU			AR								
02032206	LENA 500XGBK	505	450	210	ES	DE	FR	EN	IT		PT		FI			RU		HU			AR								
02032005	LENA 600XGWH	505	450	210	ES	DE	FR	EN	IT		PT		FI			RU		HU			AR								
02032006	LENA 500XGWH	505	450	210	ES	DE	FR	EN	IT		PT		FI			RU		HU			AR								
02181302	GLADIUS 900 XGBK	308	273	134	ES	DE	FR	EN	IT	NL	PT	DA	FI	SV	EL	RU	PL	HU	ZH	NO	AR								
02029207	LEGEND 9000 XGBK	325	280	135	ES	DE	FR	EN	IT		PT																		
02021202	LEGEND 7000 XGBK	419	360	170	ES	DE	FR	EN	IT		PT																		
02060208	LEGEND 6000 XGBK	500	420	208	ES	DE	FR	EN	IT		PT																		
02029305	LEGEND 900 X	316	316	144	ES	DE	FR	EN	IT	NL	PT	DA	FI	SV	EL	RU	PL	HU	ZH	NO	AR								
02021306	LEGEND 700 X	360	360	168	ES	DE	FR	EN	IT	NL	PT	DA	FI	SV	EL	RU	PL	HU	ZH	NO	AR								
02132304	SYGMA 12000 X	127	113	55	ES	DE	FR	EN	IT	NL	PT	DA	FI	SV	EL	RU	PL	HU	ZH	NO	AR								
02075303	SYGMA 9000 X	300	288	120	ES	DE	FR	EN	IT	NL	PT	DA	FI	SV	EL	RU	PL	HU	ZH	NO	AR								
02021307	SYGMA 7000 X	360	360	168	ES	DE	FR	EN	IT	NL	PT	DA	FI	SV	EL	RU	PL	HU	ZH	NO	AR								
02060308	SYGMA 6000 X	408	408	192	ES	DE	FR	EN	IT	NL	PT	DA	FI	SV	EL	RU	PL	HU	ZH	NO	AR								
02075400	SYGMA 900 BK /C	300	288	144	ES	DE	FR	EN	IT	NL	PT	DA	FI	SV	EL	RU	PL	HU	ZH	NO	AR								
02029600	S PLUS 900 X /L	300	288	144	ES	DE	FR	EN	IT	NL	PT	DA	FI	SV	EL	RU	PL	HU	ZH	NO	AR								
02021600	S PLUS 700 X /L	375	360	168	ES	DE	FR	EN	IT	NL	PT	DA	FI	SV	EL	RU	PL	HU	ZH	NO	AR								
02060600	S PLUS 600 X /L	425	408	192	ES	DE	FR	EN	IT	NL	PT	DA	FI	SV	EL	RU	PL	HU	ZH	NO	AR								
02029309	ST-9000 X																												
02021309	ST-7000 X																												
02060309	ST-6000 X																												
02008210	GAMMA 900 GX /F	312	288	128	ES	DE	FR	EN	IT	NL	PT	DA	FI	SV	EL	RU	PL	HU	ZH	NO	AR								
02006205	GAMMA 700 GX /F	390	360	176	ES	DE	FR	EN	IT	NL	PT	DA	FI	SV	EL	RU	PL	HU	ZH	NO	AR								
02005219	GAMMA 600 GX /F	442	408	192	ES	DE	FR	EN	IT	NL	PT	DA	FI	SV	EL	RU	PL	HU	ZH	NO	AR								
02008299	CG5-T900 X																												
02005299	CG5-T600 X																												
02157309	BETA 1200 X /E	243	215	105	ES	DE	FR	EN	IT	NL	PT	DA	FI	SV	EL	RU	PL	HU	ZH	NO	AR								
02051303	BETA 900 X /E	384	336	164	ES	DE	FR	EN	IT	NL	PT	DA	FI	SV	EL	RU	PL	HU	ZH	NO	AR								
02093303	BETA 700 X /E	480	420	208	ES	DE	FR	EN	IT	NL	PT	DA	FI	SV	EL	RU	PL	HU	ZH	NO	AR								
02050305	BETA 600 X /E	556	488	236	ES	DE	FR	EN	IT	NL	PT	DA	FI	SV	EL	RU	PL	HU	ZH	NO	AR								
02003307	OMEGA 7500 X	547	435	215	ES	DE	FR	EN	IT		PT																		
02004305	OMEGA 900 X /L	384	336	164	ES	DE	FR	EN	IT	NL	PT	DA	FI	SV	EL	RU	PL	HU	ZH	NO	AR								
02003305	OMEGA 700 X /L	480	420	208	ES	DE	FR	EN	IT	NL	PT	DA	FI	SV	EL	RU	PL	HU	ZH	NO	AR								
02002305	OMEGA 600 X /L	556	488	236	ES	DE	FR	EN	IT	NL	PT	DA	FI	SV	EL	RU	PL	HU	ZH	NO	AR								
02004005	OMEGA 900 WH /L	384	336	164	ES	DE	FR	EN	IT	NL	PT	DA	FI	SV	EL	RU	PL	HU	ZH	NO	AR								
02003005	OMEGA 700 WH /L	480	420	208	ES	DE	FR	EN	IT	NL	PT	DA	FI	SV	EL	RU	PL	HU	ZH	NO	AR								
02002005	OMEGA 600 WH /L	556	488	236	ES	DE	FR	EN	IT	NL	PT	DA	FI	SV	EL	RU	PL	HU	ZH	NO	AR								
02004403	OMEGA 900 BK /L	384	336	164	ES	DE	FR	EN	IT	NL	PT	DA	FI	SV	EL	RU	PL	HU	ZH	NO	AR								
02002403	OMEGA 600 BK /L	556	488	236	ES	DE	FR	EN	IT	NL	PT	DA	FI	SV	EL	RU	PL	HU	ZH	NO	AR								
02004397	V-9000 X /B																												
02002397	V-6000 X /B																												
02002097	V-6000 WH /A																												
02085301	V-7000 X																												
02088306	V-5000 X																												
02063207	V3-S900 X																												
02061207	V3-S600X																												
02061007	V3-S600 WH																												
02149402	Q-7790 BK /L	308	273	134	ES	DE	FR	EN	IT	NL	PT	DA	FI	SV	EL	RU	PL	HU	ZH	NO	AR								
02148402	Q-7760 BK /L	439	389	191	ES	DE	FR	EN	IT	NL	PT	DA	FI	SV	EL	RU	PL	HU	ZH	NO	AR								

HOODS

		LOADINGS			LANGUAGE MANUAL																								
CODE	MODEL	40HC	40'	20'	ES	DE	FR	EN	IT	NL	PT	DA	FI	SV	EL	RU	PL	HU	ZH	NO	AR	UK	RO	LT	KO	HE	CZ	SK	SR
02165202	CHORUS XGX /B	307	272	133	ES	DE	FR	EN	IT	NL	PT	DA	FI	SV	EL	RU	PL	HU	ZH	NO	AR								
02052300	NEBLIA 600 X /A	527	476	236	ES	DE	FR	EN	IT	NL	PT	DA	FI	SV	EL	RU	PL	HU	ZH	NO	AR								
02088310	NEBLIA 500 INOX	555	480	225	ES	DE	FR	EN	IT	NL	PT	DA	FI	SV	EL	RU	PL	HU	ZH	NO	AR								
02052400	NEBLIA 600 BK	527	476	236	ES	DE	FR	EN	IT	NL	PT	DA	FI	SV	EL	RU	PL	HU	ZH	NO	AR								
02052000	NEBLIA 600 WH	527	476	236	ES	DE	FR	EN	IT	NL	PT	DA	FI	SV	EL	RU	PL	HU	ZH	NO	AR								
02088010	NEBLIA 500 WH	555	480	225	ES	DE	FR	EN	IT	NL	PT	DA	FI	SV	EL	RU	PL	HU	ZH	NO	AR								
02052803	NEBLIA IVORY	527	476	236	ES	DE	FR	EN	IT	NL	PT	DA	FI	SV	EL	RU	PL	HU	ZH	NO	AR								
02189005	TENTA 90 GWH	481	426	209	ES	DE	FR	EN			PT																		
02186207	CORONA X 120	200	215	104																									
02189306	CORONA X 90	424	376	184	ES	DE	FR	EN	IT	NL	PT	DA	FI	SV	EL	RU	PL	HU	ZH	NO	AR								
02186202	CORONA X 70	606	537	263	ES	DE	FR	EN	IT	NL	PT	DA	FI	SV	EL	RU	PL	HU	ZH	NO	AR								
02186205	CORONA X 60	695	615	302	ES	DE	FR	EN	IT	NL	PT	DA	FI	SV	EL	RU	PL	HU	ZH	NO	AR								
02189307	ARMONIA 90 X	424	376	184	ES	DE	FR	EN	IT	NL	PT	DA	FI	SV	EL	RU	PL	HU	ZH	NO	AR								
02186203	ARMONIA 60 X	695	615	302	ES	DE	FR	EN	IT	NL	PT	DA	FI	SV	EL	RU	PL	HU	ZH	NO	AR								
02186206	ARMONIA 45 X	966	854	420	ES	DE	FR	EN	IT	NL	PT	DA	FI	SV	EL	RU	PL	HU	ZH	NO	AR								
02131207	GC DUAL 75 WH	616	546	268	ES	DE	FR	EN	IT	NL	PT	DA	FI	SV	EL	RU	PL	HU	ZH	NO	AR								
02130207	GC DUAL 45 WH	955	846	415	ES	DE	FR	EN	IT	NL	PT	DA	FI	SV	EL	RU	PL	HU	ZH	NO	AR								
02131208	GC DUAL 75 BK	616	546	268	ES	DE	FR	EN	IT	NL	PT	DA	FI	SV	EL	RU	PL	HU	ZH	NO	AR								
02130208	GC DUAL 45 BK	955	846	415	ES	DE	FR	EN	IT	NL	PT	DA	FI	SV	EL	RU	PL	HU	ZH	NO	AR								
02031308	GCX 83 SD	624	546	264	ES	DE	FR	EN	IT	NL	PT	DA	FI	SV	EL	RU	PL	HU	ZH	NO									
02030308	GCX 53 SD	930	816	396	ES	DE	FR	EN	IT	NL	PT	DA	FI	SV	EL	RU	PL	HU	ZH	NO									
02130303	GP45X	780	691	339	ES	DE	FR	EN	IT	NL	PT	DA	FI	SV	EL	RU	PL	HU	ZH	NO	AR								
02131303	GP75X	562	498	244	ES	DE	FR	EN	IT	NL	PT	DA	FI	SV	EL	RU	PL	HU	ZH	NO	AR								
02131305	GL 75 X /C	616	546	268	ES	DE	FR	EN	IT	NL	PT	DA	FI	SV	EL	RU	PL	HU	ZH	NO									
02030305	GL 45 X /C	966	828	396	ES	DE	FR	EN	IT	NL	PT	DA	FI	SV	EL	RU	PL	HU	ZH	NO									
02030307	GT-PLUS 45 X /L	966	828	396	ES	DE	FR	EN	IT	NL	PT	DA	FI	SV	EL	RU	PL	HU	ZH	NO									
02030007	GT-PLUS 45 WH /L	966	828	396	ES	DE	FR	EN	IT	NL	PT	DA	FI	SV	EL	RU	PL	HU	ZH	NO									
02030407	GT-PLUS 45 BK /L	966	828	396	ES	DE	FR	EN	IT	NL	PT	DA	FI	SV	EL	RU	PL	HU	ZH	NO									
02031300	GCB 73 X																												
02030300	GCB 55 X																												
02130302	G 50 LUX X	849	752	369	ES	DE	FR	EN	IT	NL	PT	DA	FI	SV	EL	RU	PL	HU	ZH	NO	AR								
02130005	G 50 LUX GWH	849	752	369	ES	DE	FR	EN	IT	NL	PT	DA	FI	SV	EL	RU	PL	HU	ZH	NO	AR								
02130402	G 50 LUX GBK	849	752	369	ES	DE	FR	EN	IT	NL	PT	DA	FI	SV	EL	RU	PL	HU	ZH	NO	AR								
02039305	G-45 X /L	1470	1260	600	ES	DE	FR	EN	IT	NL	PT					RU													
02039005	G-45 WH /L	1470	1260	600	ES	DE	FR	EN	IT	NL	PT					RU													
02010203	TFH-7600 GWH	701	613	280	ES		FR	EN			PT																		
02010305	TFH-7600 X	701	613	280	ES		FR	EN			PT																		
02010300	TFH 6630 X	980	880	440	ES	DE	FR	EN			PT																		
02010301	TFH 6630 WH	980	880	440	ES	DE	FR	EN			PT																		
02010302	TFH 6630 BK	980	880	440	ES	DE	FR	EN			PT																		
02010608	TFH 6430 X	980	880	440	ES	DE	FR	EN			PT																		
02010008	TFH 6430 GWH	980	880	440	ES	DE	FR	EN			PT																		
02010408	TFH 6430 GBK	980	880	440	ES	DE	FR	EN			PT																		
02017202	TF-2003 600 GWH /A	1260	1080	540	ES	DE	FR	EN	IT	NL	PT					RU					AR								
02017203	TF-2003 600 GBK /B	1260	1080	540	ES	DE	FR	EN	IT	NL	PT					RU					AR								
02094305	TF-2003 DURALUM 900 /D	770	656	324	ES	DE	FR	EN	IT	NL	PT					RU					AR								
02089305	TF-2003 DURALUM 700 /D	960	828	414	ES	DE	FR	EN	IT	NL	PT					RU					AR								
02017305	TF-2003 DURALUM 600 /D	1260	1080	540	ES	DE	FR	EN	IT	NL	PT					RU					AR								
02017306	TF-2003 600 X	1260	1080	540	ES	DE	FR	EN	IT	NL	PT					RU					AR								
02034310	TF-5260 X /L	1250	1116	516	ES	DE	FR	EN	IT	NL	PT					RU													
02034501	TF-5260 WH /L	1250	1116	516	ES	DE	FR	EN	IT	NL	PT					RU													
02034606	TFB-5160 X	1100	990	475	ES	DE	FR	EN	IT		PT																		
02034107	TFB-5160 WH																												
02034408	TFB-5160 BK																												
02097305	TF-5250 X /L	1250	1116	516	ES	DE	FR	EN	IT	NL	PT					RU													
02097002	TF-5250 WH /L	1250	1116	516	ES	DE	FR	EN	IT	NL	PT					RU													
02097306	TFB-5150 X	1100	990	475	ES	DE	FR	EN	IT		PT																		
02033309	TF-5060 X /L	1250	1116	516	ES	DE	FR	EN	IT	NL	PT					RU													
02001301	S-BOX X /A	876	732	344	ES	DE	FR	EN	IT	NL	PT																		
02011309	F-2060 X /L	1437	1236	612	ES	DE	FR	EN	IT	NL	PT					RU					AR								
02011317	LF-2060 X/L	1617	1380	684	ES	DE	FR	EN	IT	NL	PT				EL	RU		HU	ZH		AR								
02015306	F-2050 X /L	1719	1482	712	ES	DE	FR	EN	IT	NL	PT					RU					AR								
02011012	F-2060 WH /L	1437	1236	612	ES	DE	FR	EN	IT	NL	PT					RU					AR								
02011017	LF-2060 WH/L	1617	1380	684	ES	DE	FR	EN	IT	NL	PT				EL	RU		HU	ZH		AR								
02015006	F-2050 WH /L	1719	1482	712	ES	DE	FR	EN	IT	NL	PT					RU					AR								
02011408	F-2060 BK /L	1437	1236	612	ES	DE	FR	EN	IT	NL	PT					RU					AR								
02014302	F-2290 X /B	744	648	320	ES	DE	FR	EN	IT	NL	PT					RU					AR								
02026306	P-3260 X /L	1372	1186	576	ES	DE	FR	EN	IT	NL	PT					RU													
02026006	P-3260 WH /L	1372	1186	576	ES	DE	FR	EN	IT	NL	PT					RU													
02028307	P-3060 X /L	1372	1186	576	ES	DE	FR	EN	IT	NL	PT					RU													
02096303	P-3050 X /L	1372	1186	576	ES	DE	FR	EN	IT	NL	PT					RU													
02028008	P-3060 WH /L	1372	1186	576	ES	DE	FR	EN	IT	NL	PT					RU													
02096005	P-3050 WH /L	1372	1186	576	ES	DE	FR	EN	IT	NL	PT					RU													

OVENS

		LOADINGS			LANGUAGE MANUAL																								
CODE	MODEL	40HC	40'	20'	ES	DE	FR	EN	IT	NL	PT	DA	FI	SV	EL	RU	PL	HU	ZH	NO	AR	UK	RO	LT	KO	HE	CZ	SK	SR
07047400	MT 9011 PRO BK	214	162	72	ES		FR	EN			PT																		
07002411	MT 8012 BK	214	162	72	ES			EN																					
07002412	MT 8012 WH	214	162	72	ES			EN																					
07001006	PR 6011 XGBK	214	162	72	ES	DE	FR	EN			PT		FI																
07001507	MDS 7208 X	216	162	72	ES			EN			PT																		
07001005	MDS 7208 WH	216	162	72	ES			EN			PT																		
07001403	MDS 7208 BK	216	162	72	ES			EN			PT																		
07034602	MDS 7206 X	216	162	72	ES			EN			PT																		
07033303	MD 6106X	216	162	72	ES	DE	FR	EN			PT					RU													
07034100	MDS 7206 WH	216	162	72	ES			EN			PT																		
07034404	ME 7207 BK	216	162	72	ES		FR	EN			PT																		
07034506	MDS 7206 BK	216	162	72	ES			EN			PT																		
07034601	MDS 7205 X	216	162	72	ES			EN			PT																		
07044606	MES 7106 X	216	162	72	ES			EN			PT																		
07007303	ME 6206 X	288	216	108	ES	DE	FR	EN			PT					RU					AR								
07044605	SES 7104 X	216	162	72	ES			EN			PT																		
07044101	SES 7104 WH	216	162	72	ES			EN			PT																		
07044600	SE 6204 X	288	216	108	ES	DE	FR	EN			PT					RU													
07044600	SE 6204 X	288	216	108	ES	DE	FR	EN			PT					RU													
07044603	SES 7004 X	216	162	72	ES			EN			PT																		
07044408	SES 7004 BK	216	162	72	ES			EN			PT																		
07044100	SES 7004 WH	216	162	72	ES			EN			PT																		
07035409	MRA 7108 BK	228	171	81	ES			EN			PT										AR								
07035009	MRA 7108 WH	228	171	81	ES			EN			PT										AR								
07003307	CMD 5008 X	284	284	140	ES	DE	FR	EN	IT	NL	PT					RU			ZH										
07003000	MD 5008 WH	284	284	140	ES	DE	FR	EN	IT	NL	PT					RU			ZH										
07003305	ME 4006X	284	284	140	ES	DE	FR	EN	IT	NL	PT					RU			ZH										

OVENS

		LOADINGS			LANGUAGE MANUAL																							
07039305	CMD 9208 BK	164	164	80	ES			EN			PT																	
07001401	CDP 780 AS BK	281	213	102	ES	DE	FR	EN	IT	NL	PT					RU			ZH		AR							
07032307	CM 760 AS BK	281	213	102	ES	DE	FR	EN	IT	NL	PT					RU			ZH		AR							
07032002	CM 760 AS WH	281	213	102	ES	DE	FR	EN	IT	NL	PT					RU			ZH		AR							

MICROWAVES

		LOADINGS			LANGUAGE MANUAL																							
CODE	MODEL	40HC	40'	20'	ES	DE	FR	EN	IT	NL	PT	DA	FI	SV	EL	RU	PL	HU	ZH	NO	AR	UK	RO	LT	KO	HE	CZ	SK	SR
07510400	MC 25 GTC BK	342	273	130	ES	DE	FR	EN			PT					RU	PL	HU			AR		RO						
07510000	MC 25 GTC WH	342	273	130	ES	DE	FR	EN			PT					RU	PL	HU			AR		RO						
07510303	MC 32 DC	375	350	173	ES	DE	FR	EN			PT					RU	PL	HU			AR		RO						
07510300	MC 25 D ENC	420	408	194	ES			EN			PT																		
07511002	MW BI2505DCG WH	450	450	210	ES		FR	EN			PT					RU													
07511402	MW BI2505DCG BK	450	450	210	ES		FR	EN			PT					RU													
07510003	MMA 20 WH	603	504	239	ES		FR	EN			PT					RU													
07510007	MW BI2005DCG WH	485	475	224	ES		FR	EN			PT		FI			RU													
07511401	MW BI2005DCG BK	485	475	224	ES		FR	EN			PT		FI			RU													
07510309	MW BI2001DCG SS	485	475	224				EN					FI																
07511305	MW BI2000MG SS	485	475	224	ES	DE	FR	EN	IT	NL	PT																		
07510308	MMA 20 X	605	504	239	ES		FR	EN			PT					RU													
07510301	MC 20 D ENC	605	504	239	ES		FR	EN			PT					RU													
07510306	MC 20 IX	605	504	239	ES		FR	EN			PT					RU													

HOBS

		LOADINGS			LANGUAGE MANUAL																							
CODE	MODEL	40HC	40'	20'	ES	DE	FR	EN	IT	NL	PT	DA	FI	SV	EL	RU	PL	HU	ZH	NO	AR	UK	RO	LT	KO	HE	CZ	SK	SR
08003400	ROCOOK INDUCTION BK	2634	2334	1145	ES																								
08003300	ROCOOK INDUCTION GR	2634	2334	1145	ES																								
08007305	ROCOOK ADVANCED KIT EN GR	2634	2334	1145				EN																					
08024202	IDF 9012 PRO BK	945	860	400	ES		FR	EN			PT																		
08081206	IDF 8021 PRO BK	990	900	420	ES		FR	EN			PT																		
08063102	IDB 6003 PRO BK	1400	1200	550	ES		FR	EN			PT																		
08026001	GIGA 750 BK	1194	1058	519	ES	DE	FR	EN			PT					RU	PL					UK							
08026002	GIGA 600 BK	1469	1302	638	ES	DE	FR	EN			PT					RU	PL					UK							
08026003	GIGA 600 WH	1469	1302	638	ES	DE	FR	EN			PT					RU	PL					UK							
08026609	GIGA 600 SD	1469	1302	638	ES	DE	FR	EN			PT					RU	PL					UK							
08000400	AS 750	420	372	182	ES		FR	EN			PT																		
08000403	IAS 770	392	392	196	ES	DE	FR	EN			PT																		
08024401	INSB 9012 BK	945	860	400	ES		FR	EN			PT																		
08081400	INSB 8021 BK	990	900	420	ES		FR	EN			PT																		
08063400	INSB 6032 BK	1440	1200	550	ES		FR	EN			PT																		
08053000	INSB 6030 WH																												
08063500	INSB 6028 BK																												
08063103	INSB 6003 BK	1400	1200	550	ES		FR	EN			PT																		
08053001	INSB 6003 WH																												
08073411	ISB 6130 BK	1469	1302	638	ES	DE	FR	EN	IT	NL	PT				EL	RU			ZH		AR								
08073211	ISB 603 BK	1469	1302	638	ES	DE	FR	EN	IT	NL	PT				EL	RU			ZH		AR								
08063101	IB 6303 BK	1400	1200	550	ES	DE	FR	EN	IT	NL	PT	DA	FI	SV	EL	RU	PL	HU	ZH	NO									
08040102	IB 6304 BK	1400	1200	550	ES	DE	FR	EN	IT	NL	PT	DA	FI	SV	EL	RU	PL	HU	ZH	NO									
08081202	IB 753 BK	1736	1539	755	ES	DE	FR	EN	IT	NL	PT	DA	FI	SV	EL	RU	PL	HU	ZH	NO									
08081100	IB 073 BK	1698	1504	738	ES	DE	FR	EN	IT	NL	PT				EL	RU			ZH		AR								
08027205	IB 772	1698	1504	738	ES	DE	FR	EN	IT	NL	PT				EL	RU			ZH		AR								
08027100	IB 0772 BK	1698	1504	738	ES	DE	FR	EN	IT	NL	PT				EL	RU			ZH		AR								
08027132	IB 1822 BK	1698	1504	738				EN																					
08027203	IB 2 PLUS BK	2465	2184	1071	ES	DE	FR	EN	IT	NL	PT	DA	FI	SV	EL	RU	PL	HU	ZH	NO									
08003401	ISB 3102 BK	2700	2300	1100	ES	DE	FR	EN	IT	NL	PT	DA	FI		EL	RU	PL	HU											
08003402	I 3002 HVI BK	3120	2730	1344	ES			EN			PT																		
08062205	IT 773	1698	1504	738	ES	DE	FR	EN	IT																				
08079202	IT 7002 BK	1698	1504	738	ES	DE		EN	IT																				
08040010	TN 604 /A	1800	1800	900	ES	DE	FR	EN	IT	NL	PT	DA	FI	SV	EL	RU	PL	HU	ZH	NO	AR								
08072201	604 HVI /B																												
08063107	TT 603 /F	1469	1302	638																									
08063403	TD 6003 BK	1800	1800	900	ES	DE	FR	EN	IT	NL	PT	DA	FI	SV	EL	RU	PL	HU	ZH	NO									
08077000	TT 5003	1959	1736	851	ES	DE	FR	EN	IT	NL	PT	DA	FI	SV	EL	RU	PL	HU	ZH	NO									
08060403	TD 3002 BK /A																												
08049006	VI 302 /C																												
08005404	LCI 9041 BK	750	650	312	ES	DE	FR	EN	IT	NL	PT					RU	PL	HU			AR	UK		LT			CZ	SK	SR
08046410	L-7005 CI	1080	936	429	ES	DE	FR	EN	IT	NL	PT					RU	PL	HU			AR	UK		LT			CZ	SK	SR
08041100	LCI 6031 WH	1125	975	481	ES	DE	FR	EN	IT	NL	PT					RU					AR								
08041500	LCI 6031 BK	1125	975	481	ES	DE	FR	EN	IT	NL	PT					RU					AR								
08041503	LCIB 6031 BK	1125	975	481	ES	DE	FR	EN	IT	NL	PT					RU					AR								
08041501	CCI 6031 BK	1125	975	481	ES	DE	FR	EN	IT	NL	PT					RU					AR								
08041412	CI 631 BK A/A	1125	975	481	ES	DE	FR	EN	IT	NL	PT					RU					AR								
08068400	CIB 6031 BK	1125	975	481	ES	DE	FR	EN	IT	NL	PT					RU					AR								
08068401	LCI 6021 BK	1125	975	481	ES	DE	FR	EN	IT	NL	PT					RU					AR								
08068403	LCIB 6021 BK	1125	975	481	ES	DE	FR	EN	IT	NL	PT					RU					AR								
08068405	SCI 6021 BK	1125	975	481	ES	DE	FR	EN	IT	NL	PT					RU					AR								
08068501	CCI 6021 BK	1125	975	481	ES	DE	FR	EN	IT	NL	PT					RU					AR								
08068309	CI 6021 BK	1125	975	481	ES	DE	FR	EN	IT	NL	PT					RU					AR								
08068402	CIB 6021 BK	1125	975	481	ES	DE	FR	EN	IT	NL	PT					RU					AR								
08041505	CCI 5003 BK	1125	975	481	ES	DE	FR	EN	IT	NL	PT					RU	PL	HU			AR	UK		LT			CZ	SK	SR
08047410	SCI 3002 BK	1802	1680	840	ES	DE	FR	EN	IT	NL	PT					RU	PL	HU			AR	UK		LT			CZ	SK	SR
08028403	RCI 631 BK	900	780	390	ES	DE	FR	EN	IT	NL	PT					RU					AR								
08005350	LGI 9041 X	750	650	312	ES	DE	FR	EN	IT	NL	PT					RU	PL	HU			AR	UK		LT			CZ	SK	SR
08045302	LGI 7041 X	1080	936	429	ES	DE	FR	EN	IT	NL	PT					RU					AR								
08045305	LGI 7041 X /A	1080	936	429	ES	DE	FR	EN	IT	NL	PT					RU					AR								
08066002	LGD 631 X	1080	936	455	ES	DE	FR	EN	IT	NL	PT					RU					AR								
08066011	GI 6031 X	1125	975	481	ES	DE	FR	EN	IT	NL	PT					RU					AR								
08066600	GI 6004 X	1125	975	481	ES	DE	FR	EN	IT	NL	PT					RU					AR								
08066312	GIB 6004 X	1125	975	481	ES	DE	FR	EN	IT	NL	PT					RU					AR								
08068308	GI 6021 X	1125	975	481	ES	DE	FR	EN	IT	NL	PT					RU					AR								
08068310	GIB 6021 X	1125	975	481	ES	DE	FR	EN	IT	NL	PT					RU					AR								
08039600	GI 3002 X /A	1802	1680	840	ES	DE	FR	EN	IT	NL	PT					RU	PL	HU			AR	UK		LT			CZ	SK	SR

KITCHENWARE

		LOADINGS			LANGUAGE MANUAL																							
CODE	MODEL	40HC	40'	20'	ES	DE	FR	EN	IT	NL	PT	DA	FI	SV	EL	RU	PL	HU	ZH	NO	AR	UK	RO	LT	KO	HE	CZ	SK	SR
03000005	SET NEW YORK	1432	1232	584	ES	DE	FR	EN			PT																		
03000006	SET PROFESSIONAL	2058	0	0	ES	DE	FR	EN			PT																		
03017400	PARRILLA BARBACOA	4160	4160	2128																									

DISHWASHERS

		LOADINGS			LANGUAGE MANUAL																							
CODE	MODEL	40HC	40'	20'	ES	DE	FR	EN	IT	NL	PT	DA	FI	SV	EL	RU	PL	HU	ZH	NO	AR	UK	RO	LT	KO	HE	CZ	SK	SR
07200005	LVI 60014 /A	162	108	54	ES			EN																					
07200006	LVI 46010 /A	248	168	80	ES			EN																					
07200007	LVI 61013 /A	162	108	54	ES			EN																					
07200008	LVI 46009 /A	248	168	80	ES			EN																					
07900002	LI 08014 /A	171	114	54	ES			EN																					
07800010	CI-54177 ST /C	105	80	40	ES			EN																					
07800008	CI-54177 NF /B	105	80	40	ES			EN																					

WINECOOLERS

		LOADINGS			LANGUAGE MANUAL																							
CODE	MODEL	40HC	40'	20'	ES	DE	FR	EN	IT	NL	PT	DA	FI	SV	EL	RU	PL	HU	ZH	NO	AR	UK	RO	LT	KO	HE	CZ	SK	SR
07751006	VI 15107 X	704	600	288	ES	DE	FR	EN			PT																		
07751007	VI 30117 X	397	304	144	ES	DE	FR	EN			PT																		
07751008	VI 54024 X	269	216	108	ES	DE	FR	EN			PT																		
07702004	VI 59082 X /A	171	114	54	ES	DE	FR	EN			PT																		

SINKS

		LOADINGS		
CODE	MODEL	40HC	40'	20'
02625006	CB 50-40 R10			
02621006	CB 45-40 R10			
02624006	CB 40-40 P R10			
02624016	CB 40-40 R10			
02607101	CB-2	600	520	240
02625300	CB 50-40	940	800	380
02621009	CB 45-40	1100	930	430
02624007	CB 40-40 /D			
02624302	CBP 40-40 /A			
02624008	CBS-1 40-40 D R10			
02624009	CBS-2 40-40 R10			
02624010	CBS-1 54-40 R10			
02606601	CDL-1 EI			
02606602	CDL-1 ED			
02606501	CDP-1 EI			
02606502	CDP-1 ED			
02603302	RD-1 EI			
02603303	RD-1 ED			
02606401	CDS-1 EI			
02606402	CDS-1 ED			
02607102	C-2 AG /B			
02604209	R-2 AG	690	580	700
02612300	CSS60-1	880	750	350
02612400	CSS-1	1200	1050	480
02612101	CS-1	1120	950	450
02602100	RS-1 /A			

TAPS

		LOADINGS		
CODE	MODEL	40HC	40'	20'
02507400	CPA			
02506400	CPB			
02506300	XPB			
02500301	XSE	9000	7800	3600
02500401	CSE	7360	6160	2720
02500400	CSA/B	7360	6160	2720
02503400	CMA/G	7360	6160	2720
02502400	CBA/C	7360	6160	2720
02501400	CBB/B	20000	16800	2000

cata

green innovation

cata

green innovation

CATA ELECTRODOMÉSTICOS S.L.
Tlf: +34 938 594 100.- Fax +34 938 594 101.
www.cata.es - www.cnagroup.es - cna@cnagroup.es
Headquarters: c/ Anabel Segura, 11, Edif. A, 3a pl. 28108. Alcobendas (Madrid. Spain)
Factory: c/ del Ter, 2, Apdo. 9. 08570. Torelló (Barcelona. Spain)

CNA group cata edesa NODOR Apelson