AV-ETTW5-DF

Single Room Heating and
Purification Ventilator
Instruction Manual

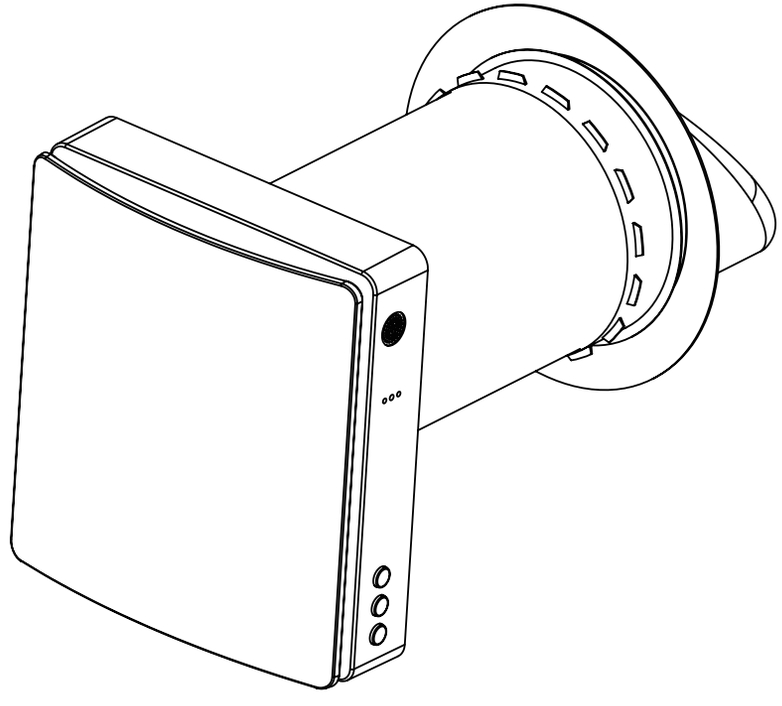

CE

Content

SAFETY REQUIREMENTS 2
INTRODUCTION 4
USE 5
PACKING LIST 5
TECHNICAL PARAMETERS 6
DESIGN AND OPERATION 7
INSTALLATION DRAWING 8
OPERATION MODES 9
VENTILATOR INSTALLATION 10
FUNCTION DESCRIPTION 13
REMOTE CONTROLLER 14
IOT NETWORKING FEATURES 15
APP DOWNLOAD INSTRUCTIONS 16
IOT NETWORKING OPERATION STEPS 16
MAINTENANCE 19
STORAGE AND TRANSPORTATION RULES 22
TROUBLESHOOTING 22

Instruction Manual for the user and the qualified installer

▶ SAFETY REQUIREMENTS

- Read the user's manual carefully before operation and installation of the heating and purifivation ventilator AV-ETTW5-DF.
- Installation and operation of the ventilator shall be performed in accordance with the present user's manual as well as the provisions of all the applicable local and national construction, electrical and technical codes and standards.
- The warnings contained in the present user's manual must be considered seriously since they contain vital personal safety information.
- It is strictly prohibited to install equipment near flammable materials such as curtains, fabrics, or paper, nor in places where flammable and explosive gases or dust are emitted, otherwise there is a risk of fire or explosion.
  Always ensure that the air path is unobstructed to avoid dry burning caused by poor air path.
- Failure to follow the safety instructions may result in personal injury or ventilator damage.
- Read the manual carefully and keep it as long as you use the ventilator.
- This appliance can be used by children aged from 8 years and above and persons with reduced physical, sensory or mental capabilities or lack of experience and knowledge if they have been given supervision or instruction concerning the use of the appliance in a safe way and understand the hazards involved.
- Don't allow children to play with the appliance.
- Don't allow children to clean and maintain without supervision.
- If the power cord is damaged, it must be replaced by the manufacturer or its service agent or similarly qualified person in order to avoid a hazard.
- It's suggested to install the ventilator more than 2.1 m above the floor.
- Precautions must be taken to prevent the back-flow of gases into the room from the open flue of gas or other fuel-burning appliances.
- Exhaust fans may adversely affect the safe operation of appliances burning gas or other fuels (including those in other rooms) by the backflow of combustion gases. These gases may cause carbon monoxide poisoning. After installation of an exhaust fan such as a partition fan or a duct fan the operation of an open flue gas appliances should be tested by a competent person to ensure that backflow of combustion gases does not occur.
- Don't recharge non-rechargeable batteries.
- Batteries must be inserted with the correct polarity.
- Remove used batteries from the appliance and safely disposed of.
- If the appliance is to be stored unused for a long period, the batteries should be removed.
- Don't short-circuit the power supply terminals.
- Take good care of the remote control to prevent children from swallowing batteries and cause accidents.

Symbol Used In The Manual



WARNING!



DO NOT!

Ventilator Installation Safety Precautions



The ventilator must be disconnected from the power supply before the installation or repair operation.



The ventilator must not be operated outside the temperature range specified in the user's manual or in aggressive or explosive environment.

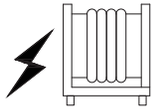

Do not place any heating devices or other equipment in close proximity to the ventilator power cord.



Do not use damaged equipment or conductors to connect the ventilator to power.

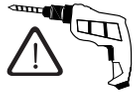

While installing the ventilator, follow the safety regulations specific to the use of electric tools.

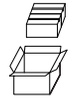

Unpack the ventilator with care.

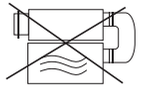

Use the ventilator only as intended by the manufacturer.

Instruction Manual for the user and the qualified installer

Ventilator Installation Safety Precautions



Do not touch the controller or the remote control with wet hands. Do not carry out the ventilator maintenance with wet hands.



Do not allow children operate the ventilator.

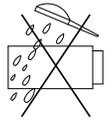

Do not clean the ventilator with water. Protect the electric parts from water ingress.

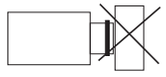

Do not block the air duct when the ventilator is on.

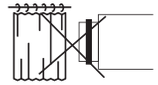

Do not install near flammable materials such as curtains.



Dot not cut the cable and reconnect.

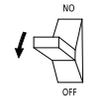

Disconnect the ventilator from the power supply before maintenance.

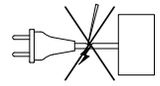

Do not damage the power cable while operating the ventilator. Do not put any objects on the power cable.

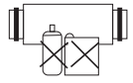

Keep explosive and inflammable products away from the ventilator.

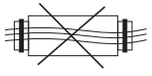

Do not open the operating ventilator.

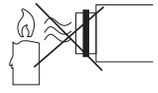

Do not direct airflow from the ventilator onto the open flames or candles.



Do not install in environments with flammable and explosive gases.

▶ INTRODUCTION

This user's manual includes technical description operation, installation and mounting guidelines, technical data for the heating and purification ventilator AV-ETTW5-DF.

USE

- The Single Room Heating and Purification Ventilator is designed for apartments, villas, hotels, cafes, and other residential and public buildings to exchange air. It is equipped with a PTC heater and a fan, the ventilator preheats and purifies fresh air, providing a warm and fresh indoor environment.
- The ventilator is designed for through the wall mounting. The telescopic design of the fan allows its installation in walls from 410 mm to 760mm thick.
- The ventilator is designed for continuous operation always connected to power supply.
- The transported air must not contain any flammable or explosive mixtures, evaporation of chemicals, coarse dust, soot and oil particles, sticky substances, fibrous materials, pathogens, or any other harmful substances.

INSTALLATION AND CONNECTION OPERATIONS MUST BE PERFORMED ONLY BY PROPERLY QUALIFIED PERSONNEL AFTER THE APPROPRIATE SAFETY BRIEFING.

THE VENTILATOR INSTALLATION SITES MUST PREVENT ACCESS BY UNATTENDED CHILDREN.

PACKING LIST

Ventilator	1 pc
Accessories bag	1 pc
Remote controller	1 pc
User's manual	1 pc
Packing box	1 pc

Instruction Manual for the user and the qualified installer

TECHNICAL PARAMETERS

- The applicable ambient temperature range of the product is -20 to 50˚C. In the fresh air electric heating regeneration mode of the product, the applicable ambient temperature range is -35 to 15˚C, and in the fresh air electric heating mode of the product, the applicable ambient temperature range is -20 to 15˚C, with a relative humidity lower than 80%.
- This product is classified as a Class II electrical appliance.
- The dust and waterproof rating of this product is IPX4.
- Due to regular design improvements, certain models of this Ventilator may differ slightly from the descriptions provided in this manual.

Ventilator Overall Dimensions (mm)

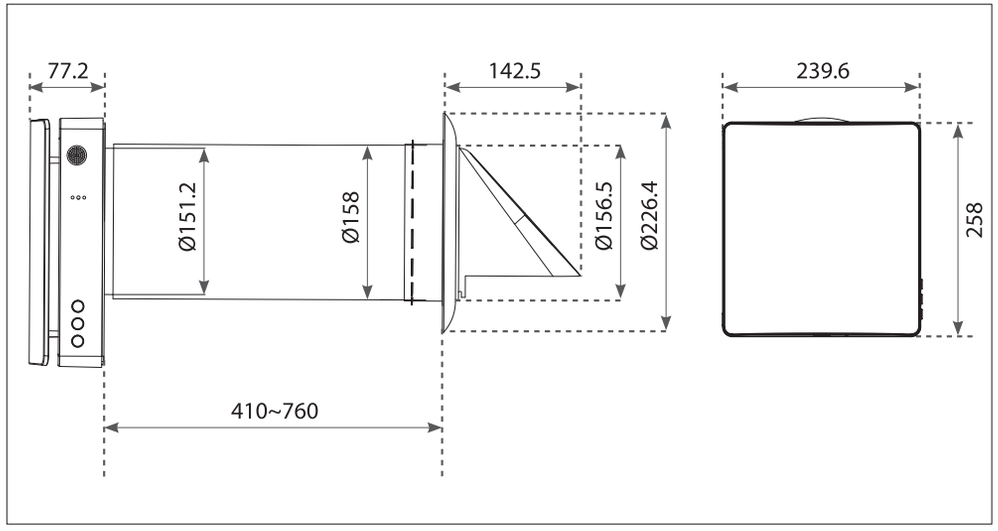

Specific ations

Description	Unit	Value
Voltage	V	200-240
Frequency	Hz	50/60
Ventilation power	W	8
Heating power	W	300
RPM	-	1000/1580/1800
Airflow (L/M/H) in ventilation mode	m^3/h	20/40/50
Airflow (L/M/H) in heating mode	m^3/h	20/40/50
Airflow (L/M/H) in ventilation mode	CFM	11.8/23.5/29.4
Airflow (L/M/H) in heating mode	CFM	11.8/23.5/29.4
Sound Pressure Level	dB(A)	28.7
Ingress Protection Rating	-	IPX4
Air Duct Diameter	mm	158
SEC	-	Class B
Mounting Type	-	Wall Mounting
Net Weight	kg	3.7
Temperature Rise	°C	25

* Note: The input power of 300W is measured in an indoor environment with an ambient temperature of 15°C and a humidity of 55%. It should be noted that the lower the ambient temperature during use, the higher the corresponding input power will be.

DESIGN AND OPERATION

- The electric heating duct section with a exchanger consists of telescopic duct, comprising the main unit components (fan, PTC heater, filters and internal duct) and external duct, which can be adapted for installation with varying wall thicknesses.
- The internal duct of the main unit contains a PTC heater, to heat up the fresh air. And an F7 filter and a primary filter, to purify the supply air, preventing dust and other foreign particles from entering the PTC heater, fan and heat exchanger.
- The ceramic heat exchange core can absorb or release heat during product operation, which is used to heat or cool the supplied air.

Instruction Manual for the user and the qualified installer

INSTALLATION DRAWING

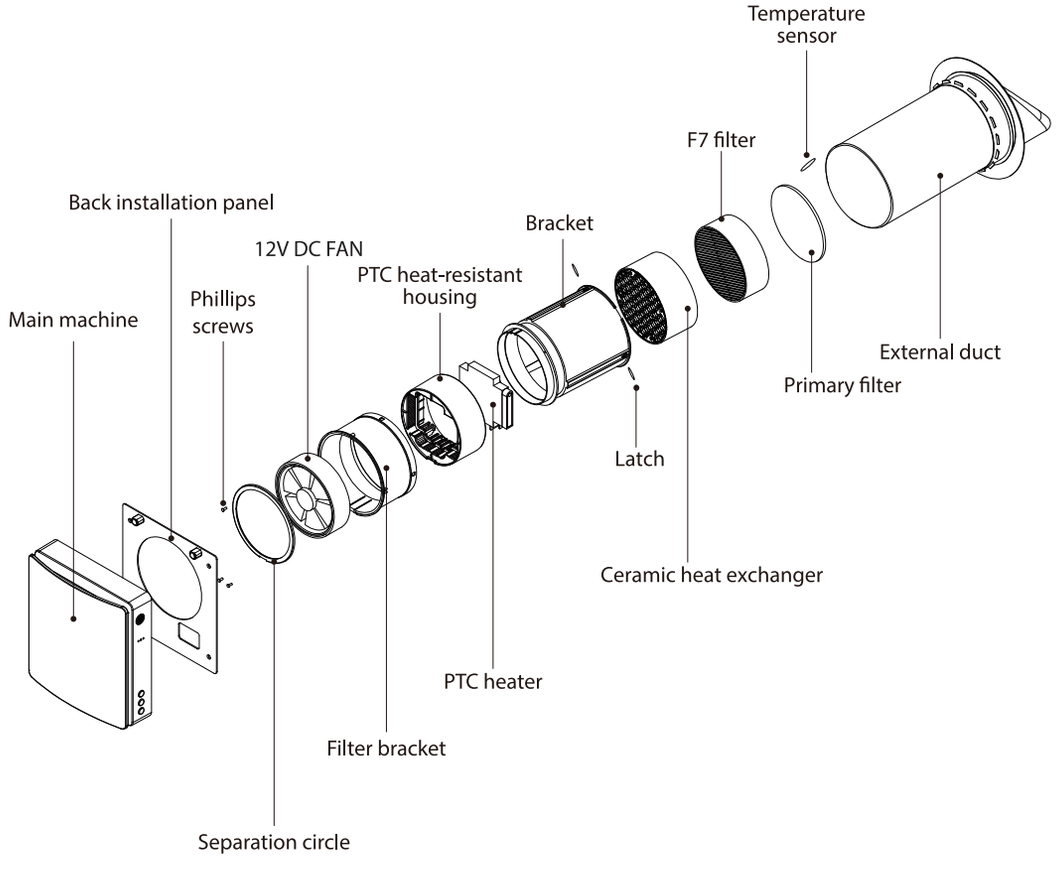

OPERATION MODES

Ventilation Mode. The ventilator runs in exhaust or supply mode at a set speed.

Regeneration Mode. The ventilator runs in two cycles of 75 seconds each, to provide heat and moisture regeneration.

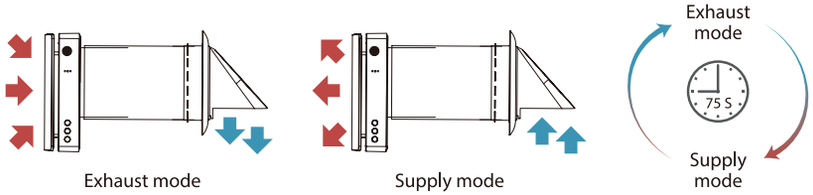

Heating Mode: The PTC heating element inside the main unit's duct section is activated, operating at the set speed to heat the incoming air in either fresh air intake mode or regeneration mode.

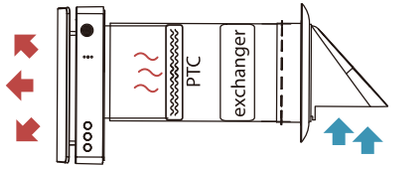

CAUTION!

INSTALLATION AND SET-UP

Read The User's Manual Before Installation The Ventilator

To prevent room dust deposition and accumulation, the ventilator must not be installed in places where the air duct may be blocked by the blinds, curtains, drapes, etc. Meanwhile, curtains might obstruct normal airflow in the room, making ventilator operation inefficient.

INSTALLATION

CAUTION!

It is strictly prohibited to install equipment near flammable materials such as curtains, fabrics, or paper, nor in places where flammable and explosive gases or dust are emitted, otherwise there is a risk of fire or explosion.

Always ensure that the air path is unobstructed to avoid dry burning caused by poor air path.

Instruction Manual for the user and the qualified installer

1.Disconnect the communication cable between the indoor unit and the fan before installation or maintenance.
Don't lift the machine by pulling on the communication cable, which may cause the cable broken.

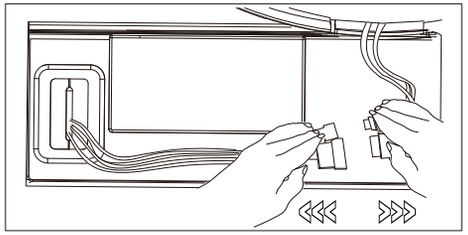

2. Drill a 170 mm round hole in the wall. The hole size is shown below.

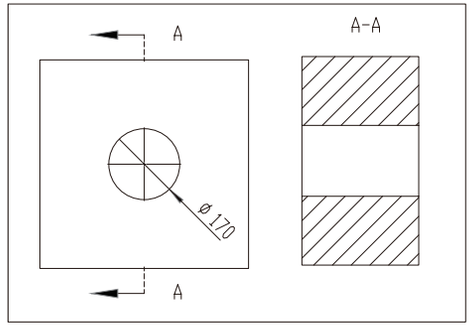

3. Assemble the inner duct and outer duct together to adapt to the thickness of the wall, then take out the inner duct and put the outer duct into the wall hole.

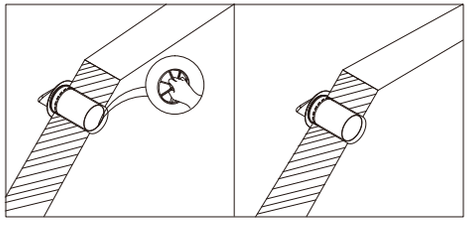

After that, grasp the bracket to spin the outer duct forward and backward, left and right to make the air inlet/outlet correctly placed downward by the sign of the external ventilation hood (The outer duct shall not be longer than the wall thickness, and the extra parts can be removed).

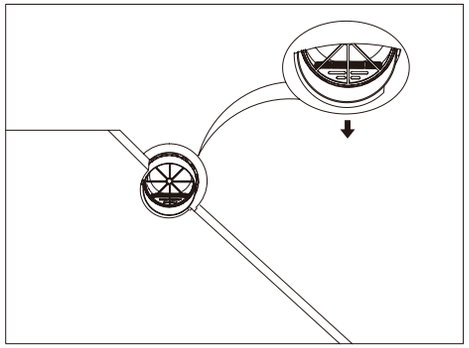

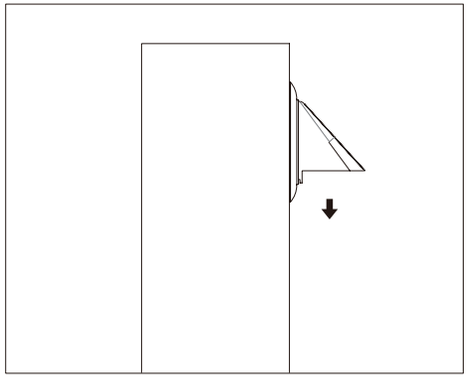

4. Pull the mobile bracket into the outer duct back into place so that the silicone ring on the outside of the outer duct is tight against the outer wall.

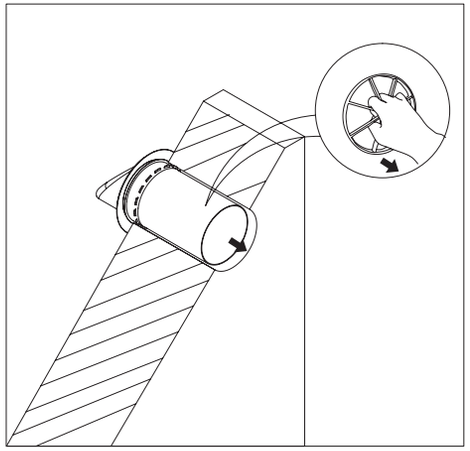

Fill the space between the wall and the outer duct with the PU glue provided in the kit before attaching the back cover mounting plate, and then wait for the glue to dry.

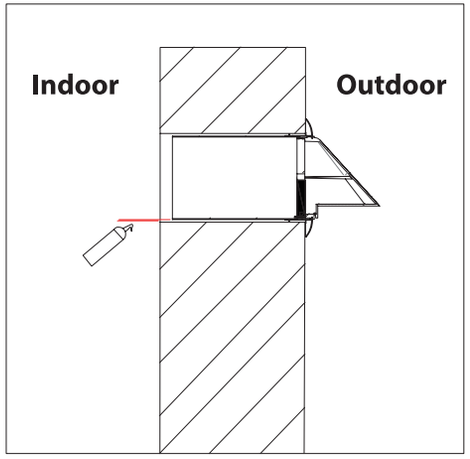

Then install the back cover mounting plate, align the round hole of the back cover the mounting plate with the round hole on the wall, and measure the level of the mounting plate with a level ruler to ensure that the mounting plate installation is horizontal, then mark the hole, punch in the expansion rubber grain, then align the mounting plate with the hole and fixing it with a screw.

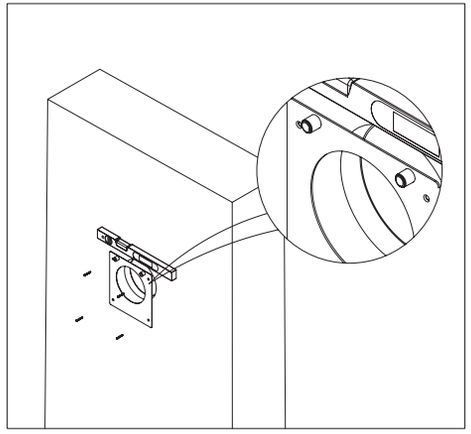

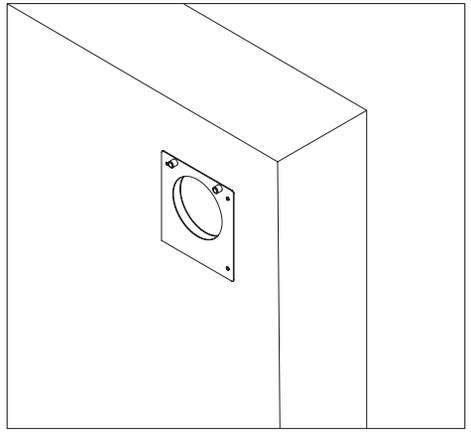

Instruction Manual for the user and the qualified installer

5. Install the main unit on the indoor surface wall, and connect the adapter wire from the back of the main unit to the wiring of the fan and temperature sensor exposed by the inner duct in the wall.

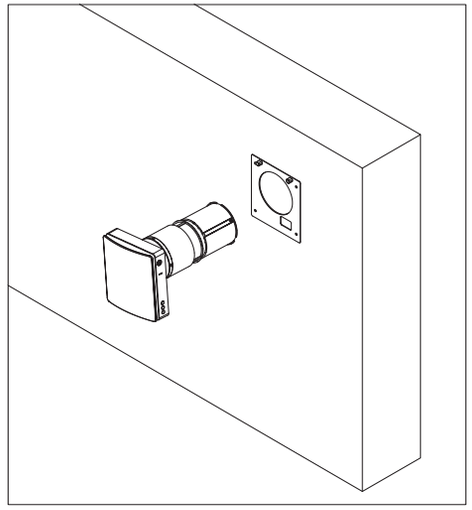

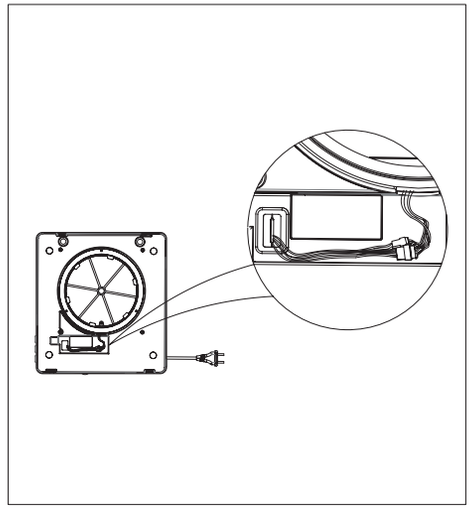

Tidy the wiring, align the main unit with the plastic block protruding on the back cover board and install it in. (There are corresponding concave holes on the back of the main unit.) Just install it, no other operations are required.

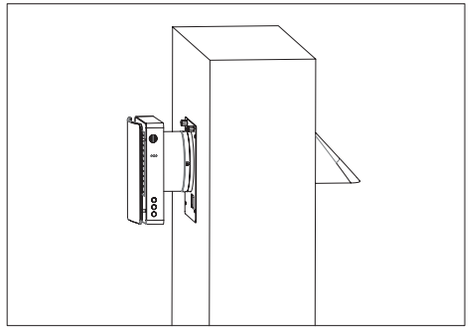

The back of the main unit is equipped with a strong magnet, which will automatically attract the mounting plate on the wall (After installation, please check that if there is a large gap between the main unit and the mounting plate. If yes, it means that the wires in the main unit are not sorted out. Therefore, please remove the main unit and reinstall it).

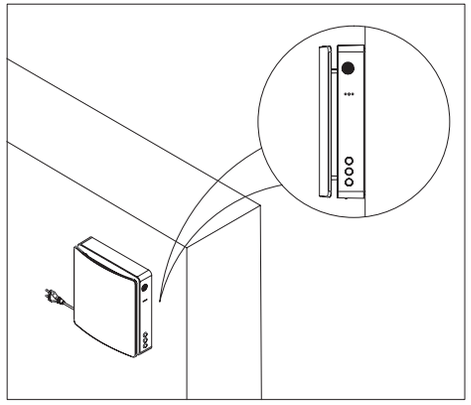

FUNCTION DESCRIPTION

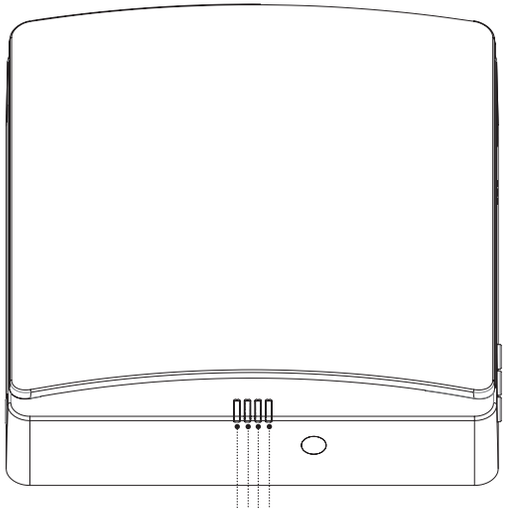

Function Light (RGB-LED)

1. Function light indicates the fan speed, 3 speeds in total.
2. The green indicates Ventilation mode.
3. The blue indicates Regeneration mode.
4. The yellow indicates Heating mode.
5. The purple indicates Regeneration heating mode.
6. The red indicates Exhaust mode.
7. The red light flashes slowly shows malfunction, E1/E2/E3 error. Please checkthe operational status of the product.
8. The LED1 indicator of the corresponding mode flashes twice then stays on: Sleep mode entered

Status Light (RGB-LED)

1. Green light is on: IoT function is enabled, WIFI is connected successfully, and it's available to control the device from the phone.
2. Red light is on: Filter cleaning alarm to remind that it is time to clean or replace the filter in the inner duct.
3. Red light flashes three times: Indicates that the filter cleaning is completed and the cleaning time is reset.
4. Red light flashes slowly: Entering WIFI Connection.

Instruction Manual for the user and the qualified installer

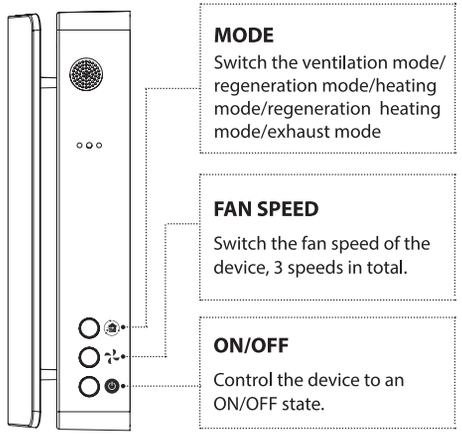

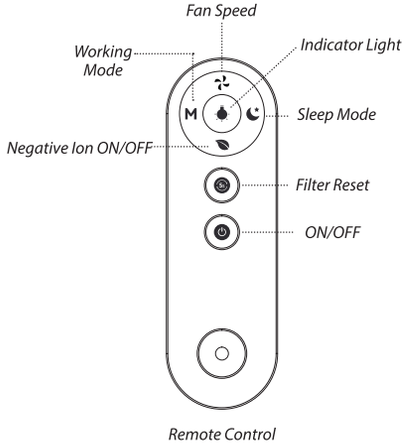

Filter Timer Setting:

Hold MODE + FAN SPEED for 5s. The light flashes red quickly (default: 720h). Press MODE to toggle between 1, 2, or 3 flashing lights (720h/1080h/1440h). Press POWER to confirm. Settings auto-revert after 20 seconds of inactivity.

Remote Controller

1. **Fan Speed:** Switch the fan speed of the device, 3 speeds in total.
2. **Working Mode:** Switch working modes of the device (ventilation mode/ regeneration mode/heating mode /regeneration heating mode/exhaust mode)
3. **Negative Ion ON/OFF:** Negative ion generator power socket work switch, (when the negative ion function is turned on, the device supplies air when the power supply, negative ion generator needs to be purchased separately and loaded)
4. **Sleep Mode ON/OFF:** Enters sleep mode. (When sleep mode is enabled, all operating modes switch to low-speed operation; heating mode and regeneration heating mode are deactivated.)
5. **Indicator Light:** Control indicator light on and off.
6. **Filter Reset:** After replacing the filter of the inner air duct, long press the button for 5 seconds, the device red light flashes three times, and the filter cleaning time reset. (Reset time default 720 hours)
7. **ON/OFF:** Turn ON/OFF the device.

This remote control uses infrared signals.

1. Before using the remote control, inset the battery into the remote control and screw the battery cover tightly
2. After inserting the battery, screw the battery cover clockwise as shown until the cover triangle arrow indicates the locking pattern, which means it is locked (please do not tighten the cover with your bare hands to avoid damage to your hands)
3. To remove the battery, turn the battery cover counterclockwise as shown in the picture until the triangle arrow of the cover indicates the unlocking pattern, that is, loose, then the battery can be removed
4. Please store the remote control properly to prevent children from swallowing the batteries and causing accidents.

IOT NETWORKING FUNCTIONS

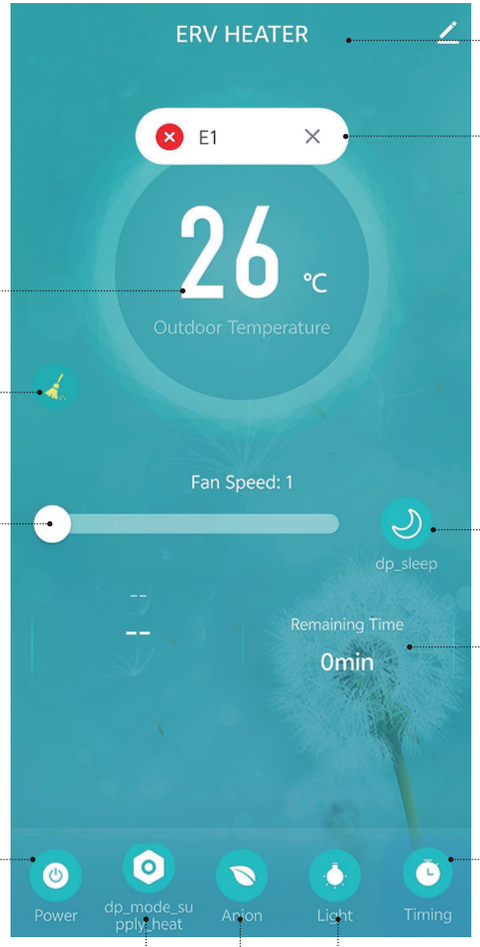

Current Device Name

Error display
E1 : Fan error.

E2 : Ambient temperature exceeds the applicable temperature range of the product: regeneration / Exhaust Mode: -20℃ to 50℃ Heating Mode: -20℃ to 15℃

E3 : Ambient temperature exceeds the applicable temperature range of product: Regeneration and heating mode: -35℃ to 15℃

Outdoor Real Temperature

Filter Alarm

Fan Speed Setting

Sleep Mode
(Low speed, low power operation.)

Remaining time to turn off ventilator

ON/OFF

12h Timer Shutdown Setting, 12 hours at max

Working Modes
(ventilation mode/ regeneration mode/ heating mode/regeneration heating mode/exhaust mode)

Negative Ion ON/OFF

Indicator light ON/OFF

Instruction Manual for the user and the qualified installer

APP DOWNLOAD INSTRUCTIONS

Scan the QR code on the right to download the app, or search "smart life" in the Apple store and Google play store to install the app, download, and install using the device's WIFI connection. It's available for the mobile app to control the device and support Google and Alexa Smart speaker control function.

IOT CONNECTION

1. Before enabling IOT networking operation, please connect your cell phone to your home router WIFI, turn on the Bluetooth function of your cell phone, and ensure that the device and cell phone are within the WIFI signal coverage (make sure the router WIFI is enabled for 2.4G network).

2. When the device is powered on, in the OFF state, long press the ON/OFF button of any device for 5 seconds, the device status indicator will flash red slowly, then the device will enter the WIFI distribution state, and the cell phone will be available for operation and connection.

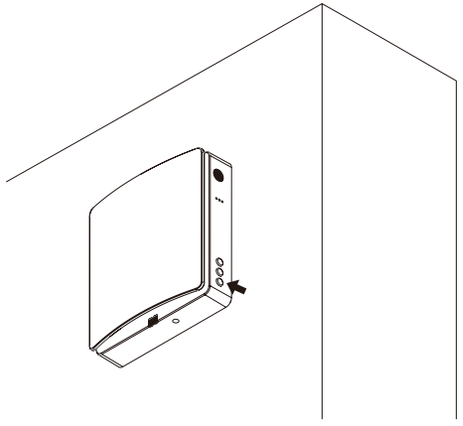

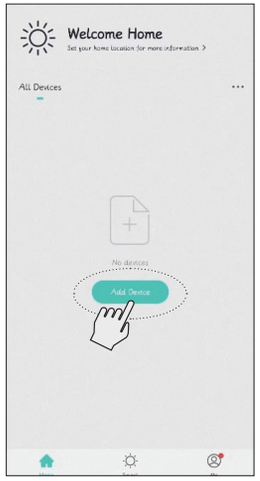

3. Open the downloaded Smart Life app, enter the operation page, click the add device box, and search for devices.

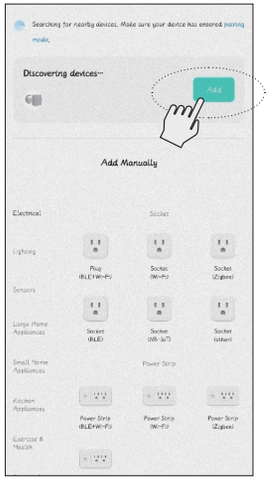

4. At this time the app receives the signal from the device, then clicks to add the device for network connection.



5. Click Add Device to find the WIFI signal of your home router, and make sure the WIFI name on the app is the same as the name of the WIFI connection to your phone, then log in with the WIFI password.



6. After successful WIFI connection, the device will be connected to the network, and after the connection is completed, you can enter the operation page to operate.

Instruction Manual for the user and the qualified installer

▶ RESETTING WIFI

Method 1

1. Return to the app operation connection page, long press the device that needs to be disconnected, then the option to remove the device will appear at the bottom.

2. Click on the remove device option and confirm to successfully disconnect the device from the WIFI.



Method 2

When the unit is powered off, press and hold the power button for 5 seconds. The product will revert to IOT connection mode, and the status light will flash slowly in red. Wait until the status light turns off. The previously connected mobile device will be automatically removed from the connection, indicating that the WIFI has been successfully reset.

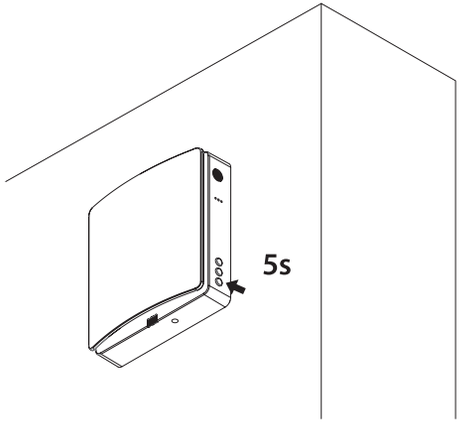

▶ MAINTENANCE AND CARE

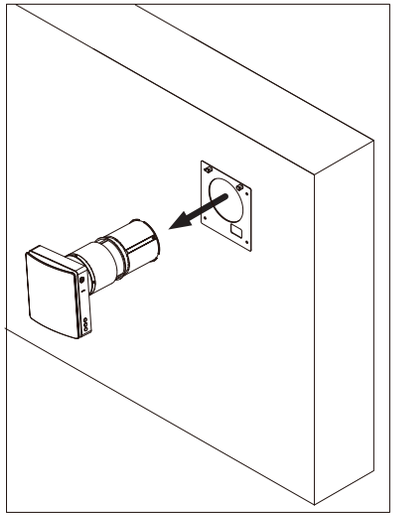

Cleaning and Maintenance

1. Remove the main body from the wall

2. Remove the 3 latch from the end, then sequentially remove the primary filter, F7 filter, and heat exchanger from the duct.

3. The F7 filter should be replaced regularly, ideally every 30 days of accumulated operation time (pay attention to the filter warning indicator on the product).

4. The primary filter should be cleaned regularly, ideally 3-4 times per year. It can be rinsed with water directly and allowed to dry before reuse. Vacuum cleaning is also permissible. The rated lifespan of the primary filter is 3 years. Contact the seller to obtain spare filters.

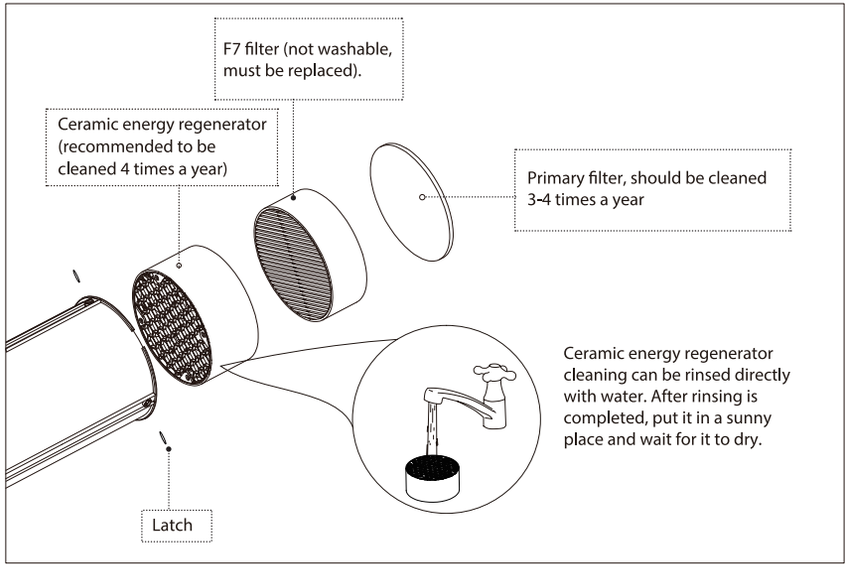

Instruction Manual for the user and the qualified installer

Motor & PTC Element Maintenance

1. First, remove the bottom cover from the back of the main unit.

(1) . As shown in the figure below, use a tool to loosen the four screws on the bottom cover connected to the main unit.

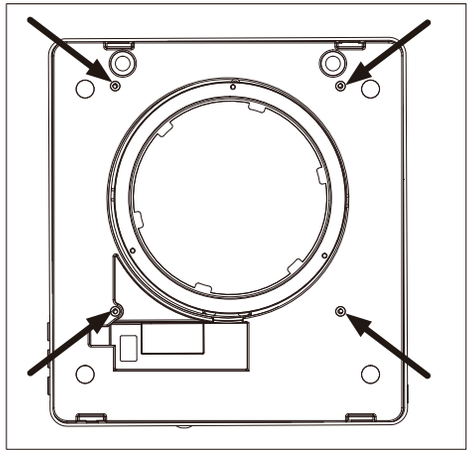

(2). As shown in the figure below, remove the bottom cover from the back of the main unit.

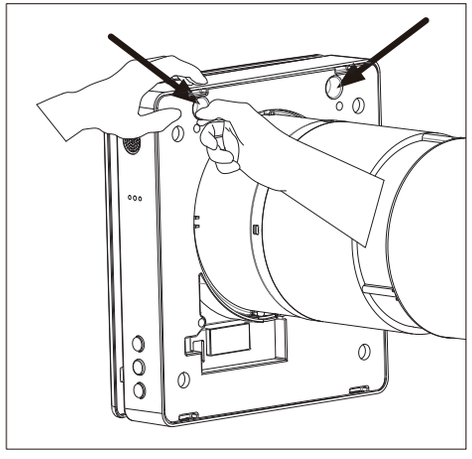

(3). As shown in the figure below, use a tool to loosen the four screws connecting the main unit to the front panel.

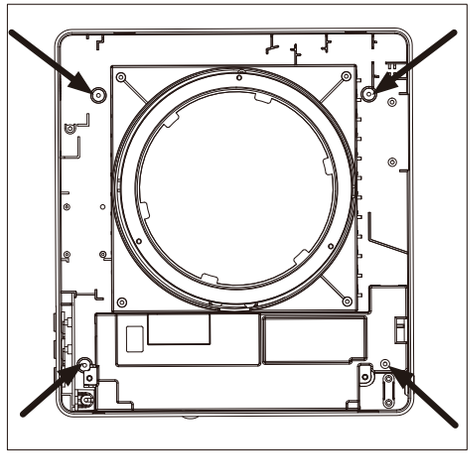

(4). Remove the front panel.

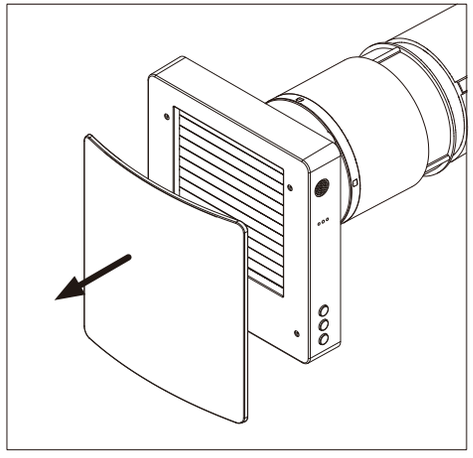

2. As shown in the diagram, remove the two louvers, then use a manual screwdriver to remove the three screws to disconnect the main unit from the pipeline (If using an electric screwdriver, adjust the torque to the lowest setting).

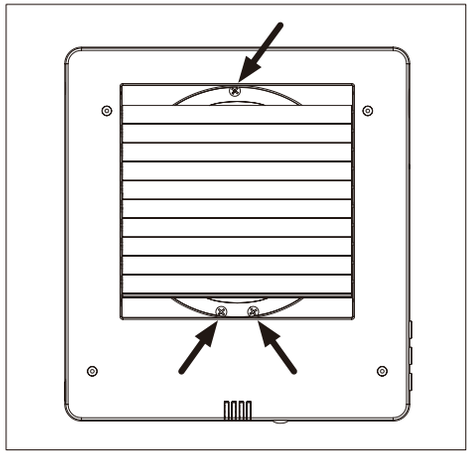

3. Remove the pipeline section and take out the fan.

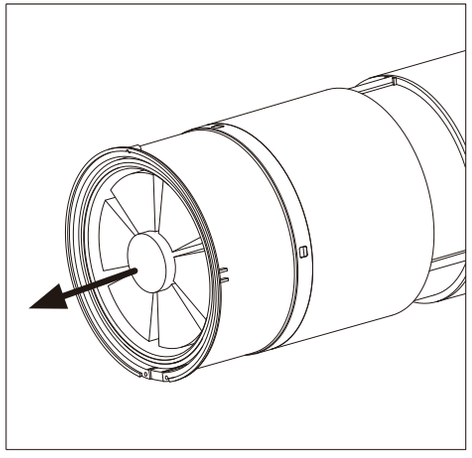

4. Use a soft brush, dry cloth, and vacuum cleaner to clean the impeller. Be careful not to use abrasive detergents, sharp objects, or completely wet cloths to avoid damaging the fan (After cleaning, when re-installing, pay attention to distinguish between the positive and negative sides of the fan to avoid incorrect installation affecting its function).

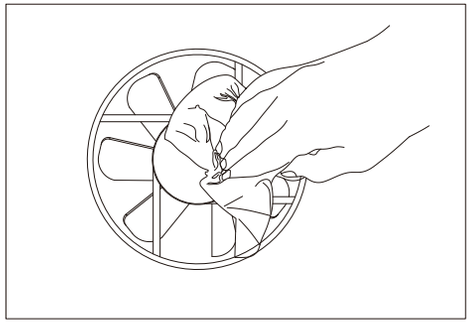

5. Use a dry cloth to reach into the pipeline and wipe the PTC heater. Simply wipe away the accumulated dust on the surface. Be careful not to use any cloth soaked in liquid or sharp objects for cleaning to avoid damaging the product.

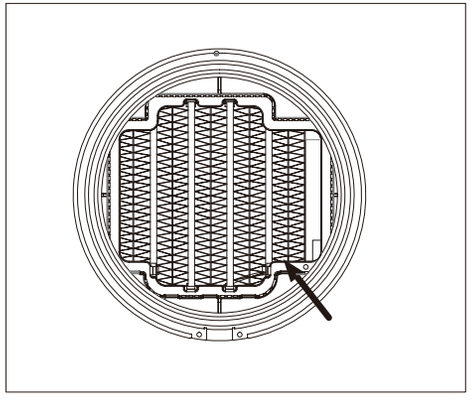

Instruction Manual for the user and the qualified installer

▶ STORAGE AND TRANSPORTATION RULES

Store the ventilator in the manufacturer's original packing box in a dry place.

The storage environment must be free of contain aggressive vapors and chemical mixtures that may cause corrosion, insulation, and sealing deformation. Use lifting equipment for handling and storage operations to prevent ventilator from damage as a consequence of failing or excessive vibration. Fulfill the handling requirements applicable for the applicable freight type.

Transportation by any type vehicle of allowed provided that the ventilator is protected against mechanical and weather damage.

Avoid any mechanical shocks and strokes during handling operations.

▶ TROUBLESHOOTING

1. **The fan does not Start up.**

   Possible reasons: No power supply.

   Troubleshooting: Make sure that the ventilator is properly connected to the power and make any corrections, if necessary.

   Possible reasons: The motor is stuck, or the impellers are clogged.

   Troubleshooting: Turn the ventilator off. Troubleshoot the motor jam and the impeller dogging. Clean the blades. Restart the ventilator.

2. **Low airflow.**

   Possible reasons: Low fan speed setting.

   Troubleshooting: Set higher speed.

   Possible reasons: Filter, fan , PTC heater or heat exchanger is dirty.

   Troubleshooting: Clean or replace the filter, and clean the fan , PTC heater and heat exchanger. For PTC heater, heat exchanger and filter maintenance, see above section.

3. **Noise, vibration.**

   Possible reasons: The impeller is dirty.

   Troubleshooting: Clean the impeller.

   Possible reasons: Loose screw connection of the ventilator casing with ducting or loose plastic ring in fan mounting.

   Troubleshooting: Tighten the screws of the ventilator or the plastic ring in fan mounting.

4. **Fresh air heating mode, unable to properly heat fresh air, or low heating capacity..**

   Possible reasons: The ambient temperature exceeds the product's operating temperature.

   Troubleshooting: Change to a suitable operating environment, or wait until the ambient temperature is suitable before using.

   Possible reasons: Using low voltage results in the PTC heater not being able to generate full power heating.

   Troubleshooting: Change to the rated voltage to use the product.

   Possible reasons: The duct is blocked, causing excessive heating of the PTC heater, triggering the PTC heater thermal protection.

   Troubleshooting: Wait for the PTC heater thermal protection to reset, then clean any blockages in the duct, such as dust and debris accumulated in the filters, fan, and PTC. Refer to the maintenance steps for guidance.

5. **WIFI connection failed.**

   Possible reasons: The mobile phone is connected to the WiFi 5G network.

   Troubleshooting: Please switch to the 2.4G frequency/network to connect.

   Possible reasons: 1) Wrong connected to public WiFi (such as WiFi in shopping malls, hotels, etc. That need to be registered and logged in). 2) The router has not yet set up an account and password. 3) The router is set to a higher security level. 4) You have exceeded the limit of devices that can be connected to the router.

   Troubleshooting: Please set up the WIFI router correctly.

   Possible reasons: Bluetooth on the mobile phone is off.

   Troubleshooting: Enable Bluetooth on the mobile phone to improve the success rate of networking.